T&S BRASS AND BRONZE WORKS, INC.

2 Saddleback Cove / P.O. Box 1088
Travelers Rest, SC 29690

Travelers Rest, SC: 800-476-4103 • Simi Valley, CA: 800-423-0150 • Fax: 864-834-3518 • www.tsbrass.com

Model No.

B-0222-CC

Item No.

ADA Compliant

This Space for Architect/Engineer Approval

Job Name_____Date_____

Model Specified_____ Quantity_____

Customer/Wholesaler_____

Contractor_____

Architect/Engineer_____

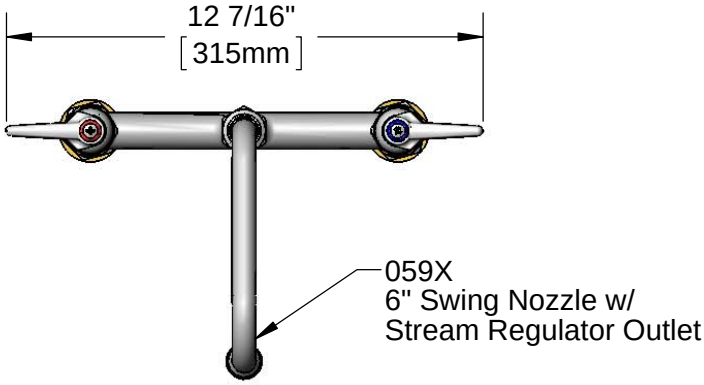

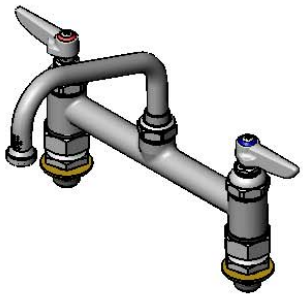

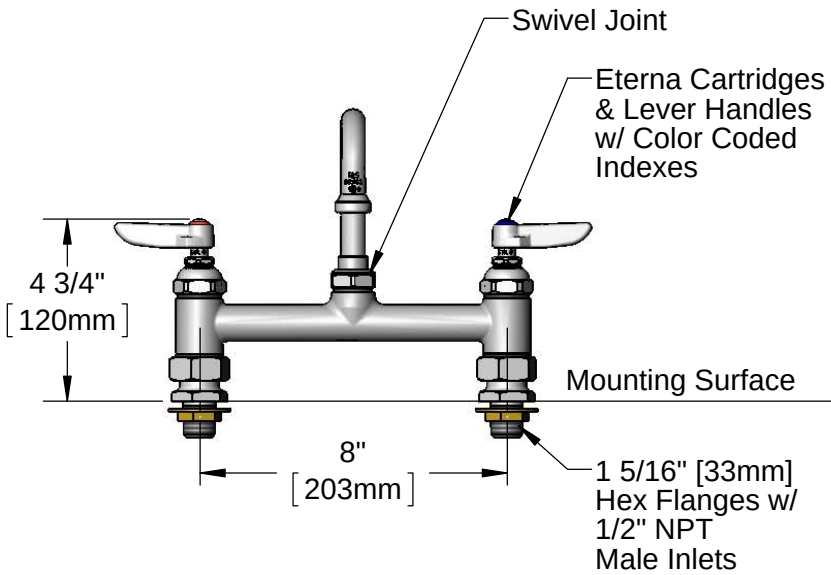

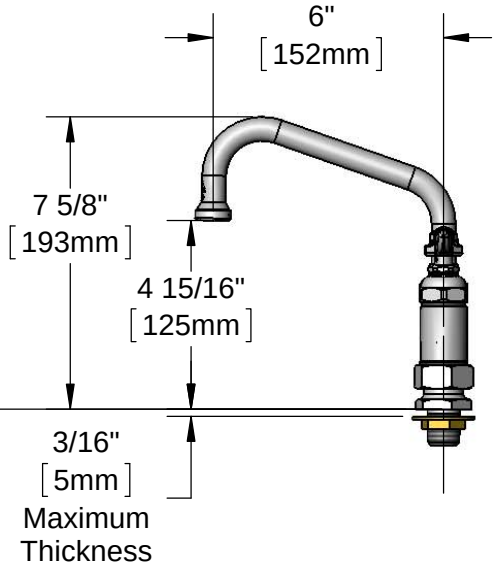

Product Specifications:

8" Deck Mount Mixing Faucet, Eterna Cartridges, Lever Handles, 6" Swing Nozzle & 1/2" NPT Male Inlets

Product Compliance:

ASME A112.18.1 / CSA B125.1
NSF 61 - Section 9
NSF 372 (Low Lead Content)
ANSI A117.1 (ADA)

Drawn: JBC	Checked: JRM	Approved: JHB	Date: 06/22/16	Scale: 1:5	Sheet: 1 of 2

T&S BRASS AND BRONZE WORKS, INC.

2 Saddleback Cove / P.O. Box 1088
Travelers Rest, SC 29690

Travelers Rest, SC: 800-476-4103 • Simi Valley, CA: 800-423-0150 • Fax: 864-834-3518 • www.tsbrass.com

Model No.

B-0222-CC

Item No.

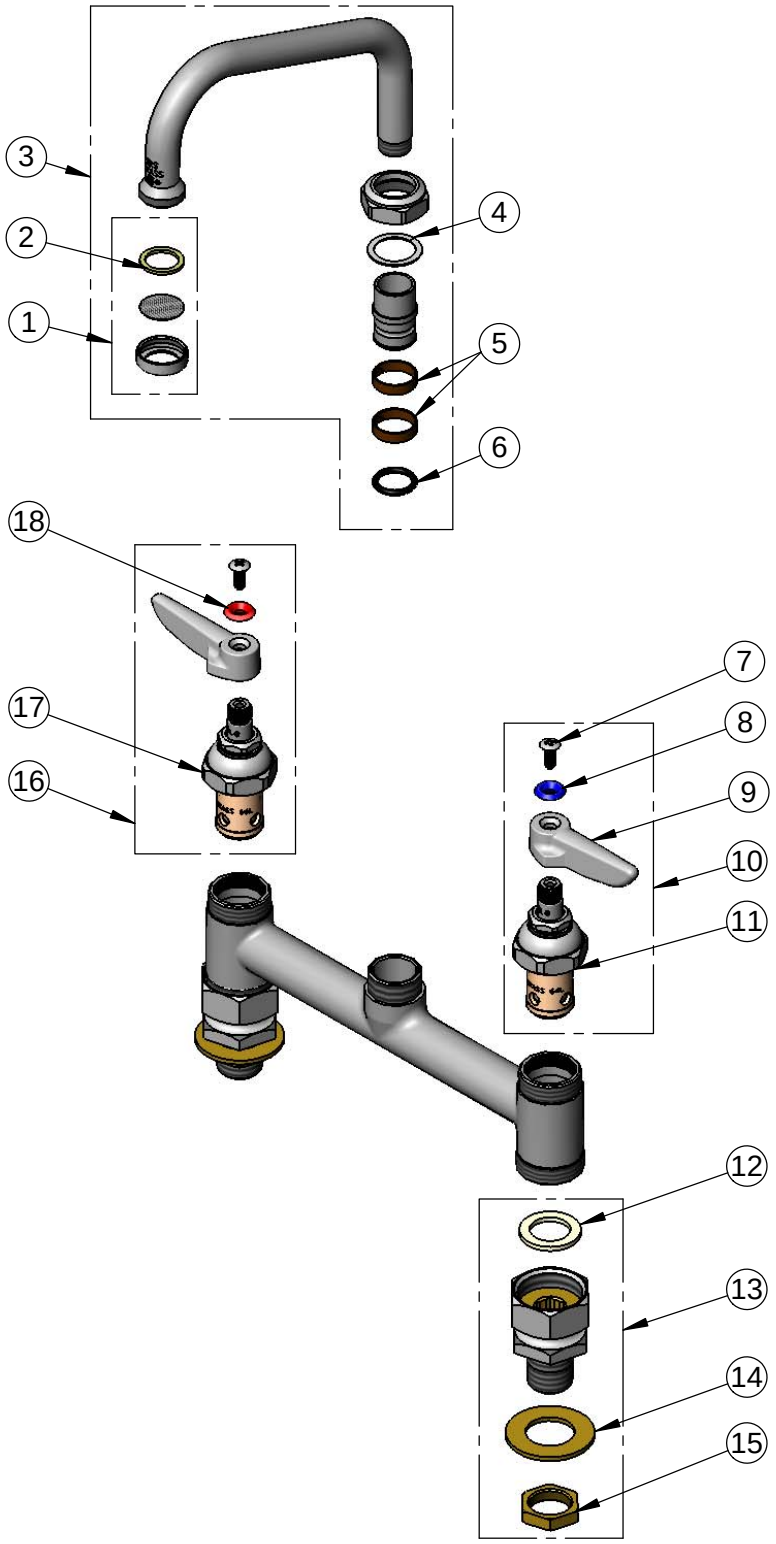

ITEM NO.	SALES NO.	DESCRIPTION
1	B-PT	Stream Regulator Outlet
2	001048-45	Nozzle Tip Washer
3	059X	6" Swing Nozzle
4	009538-45	Swivel Washer
5	011429-45	Swivel Sleeves (2)
6	001074-45	O-Ring
7	000922-45	Lever Handle Screw
8	001660-45	Blue Index-CW
9	001638-45	Lever Handle
10	002713-40	Eterna Cartridge, LTC w/ Handle, Index & Screw
11	005959-40	Eterna Cartridge, LTC
12	001019-45	Coupling Nut Washer
13	00CC	1/2" NPT Male Inlet Flange
14	000999-45	Brass Lock Washer
15	002954-45	Shank Lock Nut
16	002714-40	Eterna Cartridge, RTC w/ Handle, Index & Screw
17	005960-40	Eterna Cartridge, RTC
18	001661-45	Red Index-HW

Product Specifications:

8" Deck Mount Mixing Faucet, Eterna Cartridges, Lever Handles, 6" Swing Nozzle & 1/2" NPT Male Inlets

Product Compliance:

ASME A112.18.1 / CSA B125.1
NSF 61 - Section 9
NSF 372 (Low Lead Content)
ANSI A117.1 (ADA)

Drawn: JBC	Checked: JRM	Approved: JHB	Date: 06/22/16	Scale: NTS	Sheet: 2 of 2