T&S BRASS AND BRONZE WORKS, INC.

2 Saddleback Cove / P.O. Box 1088
Travelers Rest, SC 29690

Travelers Rest, SC: 800-476-4103 • Simi Valley, CA: 800-423-0150 • Fax: 864-834-3518 • www.tsbrass.com

Model No.

B-0221-EE

Item No.

ADA Compliant

This Space for Architect/Engineer Approval

Job Name_____Date_____

Model Specified_____ Quantity_____

Customer/Wholesaler_____

Contractor_____

Architect/Engineer_____

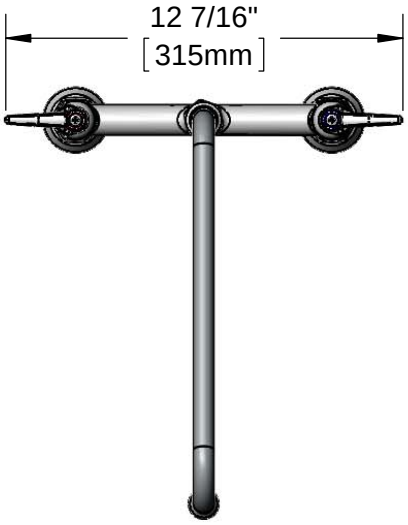

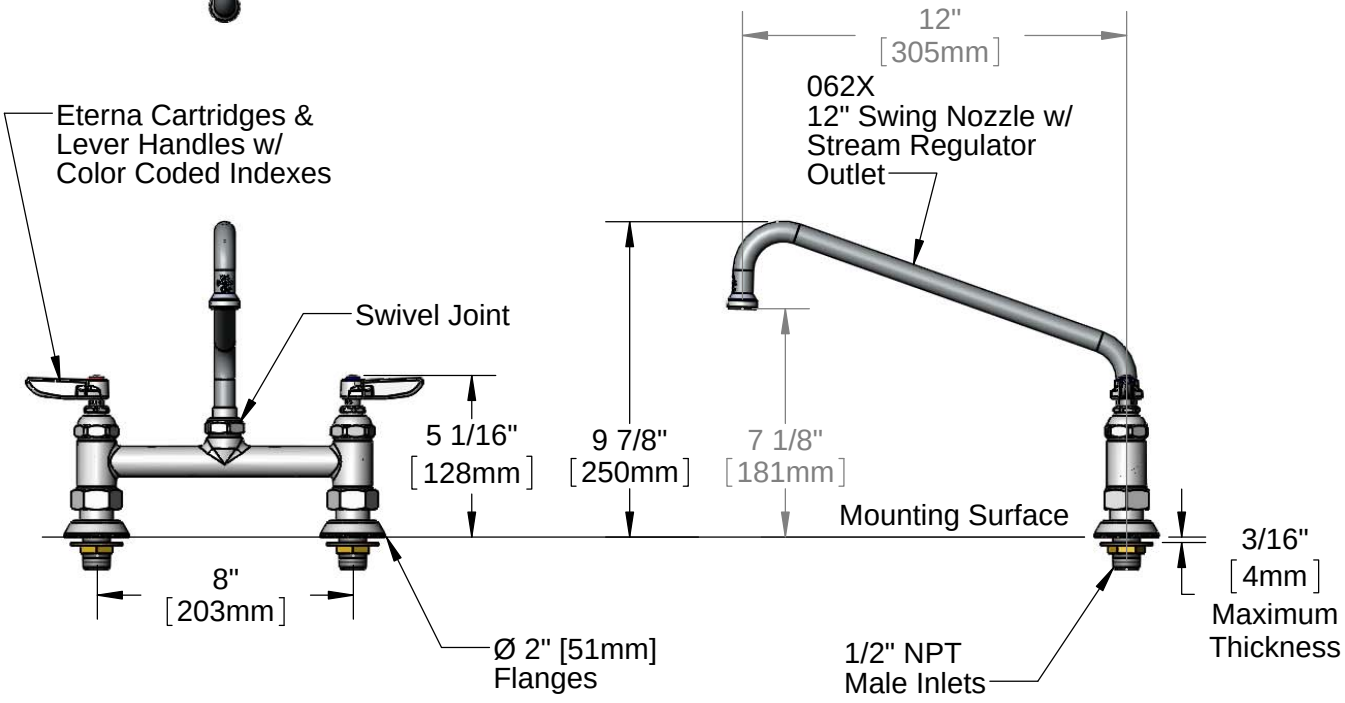

Rough-In Requirement:
(2) ∅ 1" [25mm] Mounting Holes

Product Specifications:

8" Deck Mount Mixing Faucet, Eterna Cartridges, Lever Handles, 12" Swing Nozzle & 1/2" NPT Male Inlets

Product Compliance:

ASME A112.18.1 / CSA B125.1
NSF 61 - Section 9
NSF 372 (Low Lead Content)
ANSI A117.1 (ADA)

Drawn: DHL	Checked: JRM	Approved: JHB	Date: 03/13/14	Scale: 1:6	Sheet: 1 of 2

T&S BRASS AND BRONZE WORKS, INC.

2 Saddleback Cove / P.O. Box 1088
Travelers Rest, SC 29690

Travelers Rest, SC: 800-476-4103 • Simi Valley, CA: 800-423-0150 • Fax: 864-834-3518 • www.tsbrass.com

Model No.

B-0221-EE

Item No.

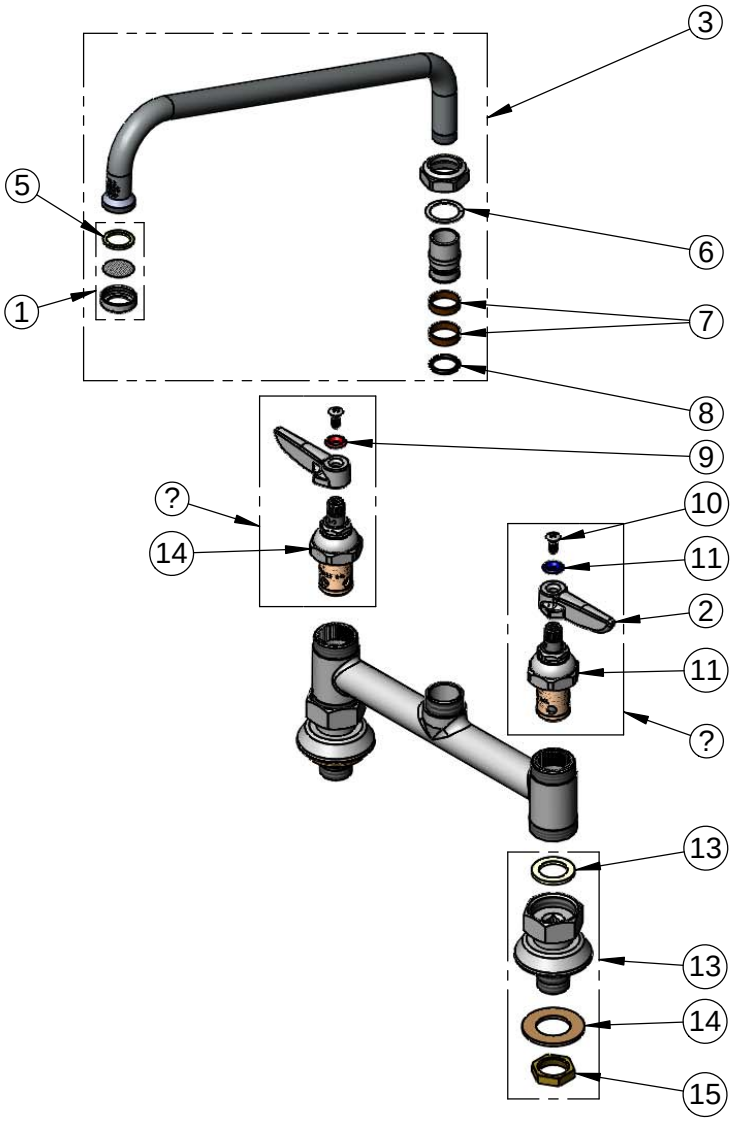

ITEM NO.	SALES NO.	DESCRIPTION
1	005960-40	Eterna Cartridge, RTC
2	001638-45	Lever Handle
3	062X	12" Swing Nozzle
4	B-PT	Stream Regulator Outlet
5	001048-45	Nozzle Tip Washer
6	009538-45	Swivel Washer
7	011429-45	Swivel Sleeves (2)
8	001074-45	O-Ring
9	001661-45	Red Index-HW
10	000922-45	Lever Handle Screw
11	001660-45	Blue Index-CW
12	005959-40	Eterna Cartridge, LTC
13	001019-45	Coupling Nut Washer
14	000999-45	Brass Lock Washer
15	002954-45	Shank Lock Nut
16	00EE	1/2" NPT Male Inlet w/ Adjustable Flange
17	002713-40	Eterna Cartridge, LTC w/ Handle, Index & Screw
18	002714-40	Eterna Cartridge, RTC w/ Handle, Index & Screw

Product Specifications:

8" Deck Mount Mixing Faucet, Eterna Cartridges, Lever Handles, 12" Swing Nozzle & 1/2" NPT Male Inlets

Product Compliance:

ASME A112.18.1 / CSA B125.1
NSF 61 - Section 9
NSF 372 (Low Lead Content)
ANSI A117.1 (ADA)

Drawn: DHL	Checked: JRM	Approved: JHB	Date: 03/13/14	Scale: NTS	Sheet: 2 of 2