T&S BRASS AND BRONZE WORKS, INC.

2 Saddleback Cove / P.O. Box 1088
Travelers Rest, SC 29690

Travelers Rest, SC: 800-476-4103 • Simi Valley, CA: 800-423-0150 • Fax: 864-834-3518 • www.tsbrass.com

Model No.

B-0221-CR

Item No.

This Space for Architect/Engineer Approval

Job Name_____Date_____

Model Specified_____ Quantity_____

Customer/Wholesaler_____

Contractor_____

Architect/Engineer_____

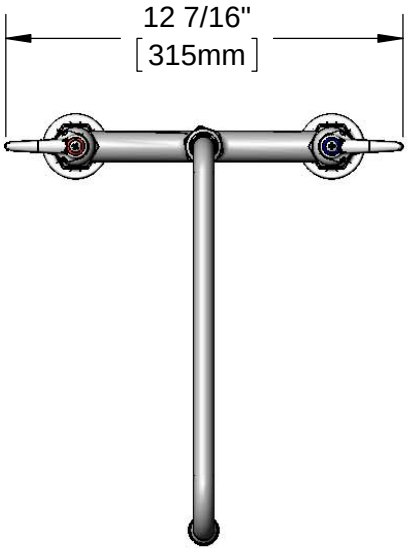

ADA Compliant

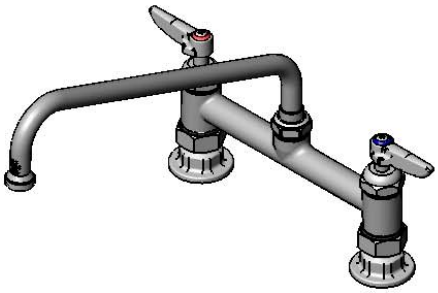

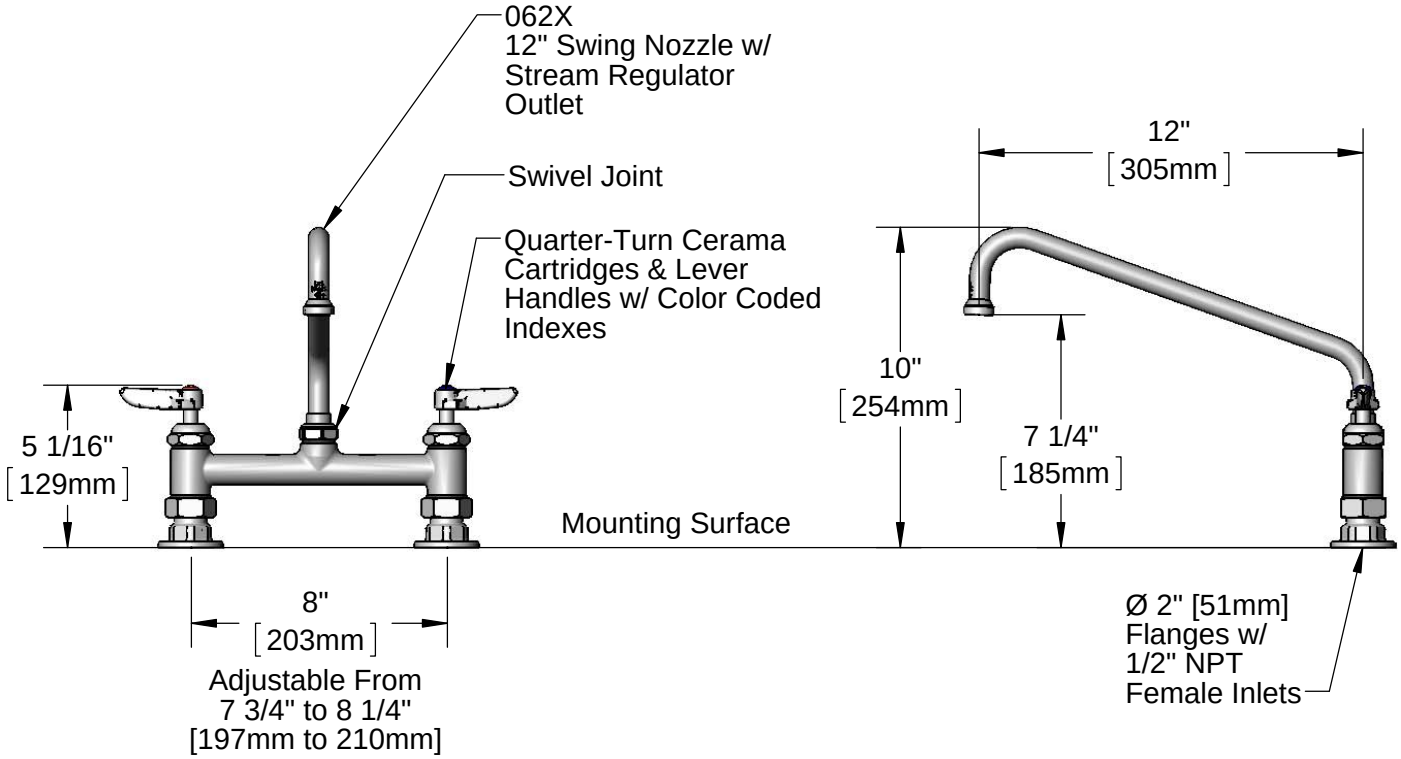

Product Specifications:

8" Deck Mount Mixing Faucet, Quarter-Turn Cerama Cartridges, Lever Handles, 12" Swing Nozzle & 1/2" NPT Female Inlets

Product Compliance:

ASME A112.18.1 / CSA B125.1
NSF 61 - Section 9
NSF 372 (Low Lead Content)
ANSI A117.1 (ADA)

Drawn: KJG	Checked: DHL	Approved: JHB	Date: 01/15/16	Scale: 1:6	Sheet: 1 of 2

T&S BRASS AND BRONZE WORKS, INC.

2 Saddleback Cove / P.O. Box 1088
Travelers Rest, SC 29690

Travelers Rest, SC: 800-476-4103 • Simi Valley, CA: 800-423-0150 • Fax: 864-834-3518 • www.tsbrass.com

Model No.

B-0221-CR

Item No.

ITEM NO.	SALES NO.	DESCRIPTION
1	062X	12" Swivel Nozzle
2	B-PT	Stream Regulator Outlet
3	001048-45	Nozzle Tip Washer
4	009538-45	Swivel Washer
5	011429-45	Swivel Sleeves (2)
6	001074-45	O-Ring
7	001661-45	Red Index-HW
8	000922-45	Lever Handle Screw
9	001660-45	Blue Index-CW
10	001638-45	Lever Handle
11	011279-25	Quarter-Turn Cerama Cartridge, LTC
12	012445-25	Quarter-Turn Cerama Cartridge, LTC w/ Handle, Index & Screw
13	001019-45	Coupling Nut Washer
14	00AA	1/2" NPT Female Eccentric Flange
15	011278-25	Quarter-Turn Cerama Cartridge, RTC
16	012444-25	Quarter-Turn Cerama Cartridge, RTC w/ Handle, Index & Screw

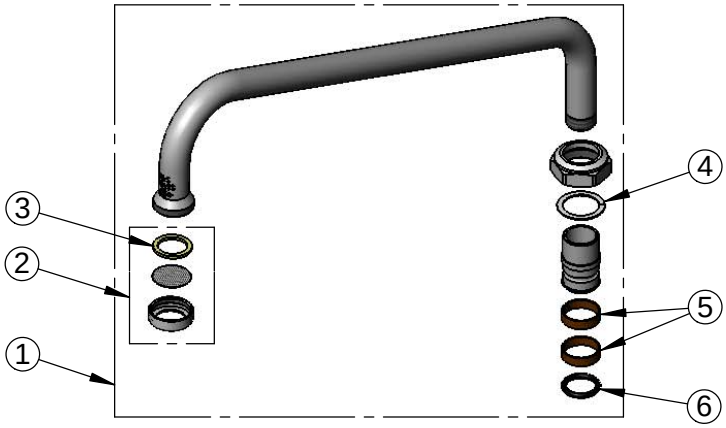

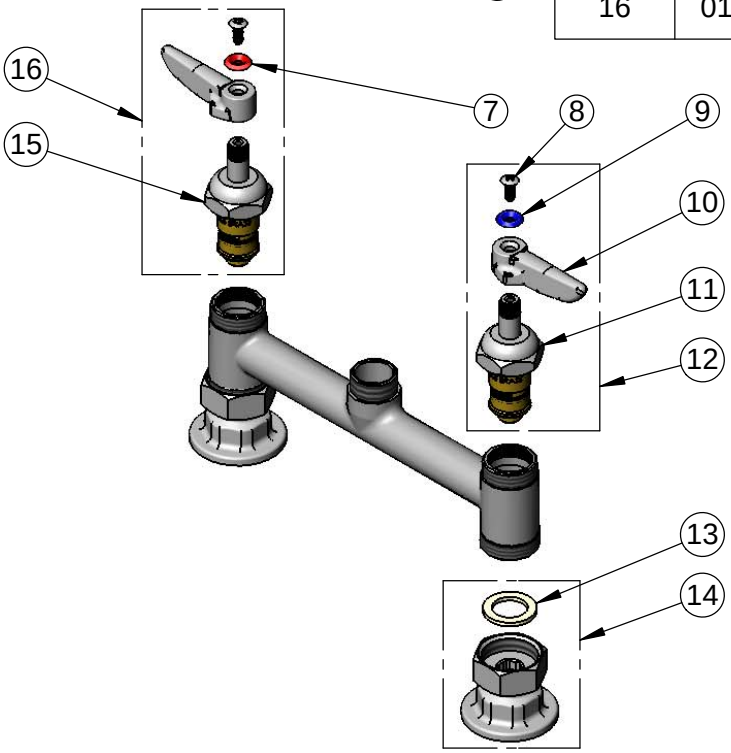

Product Specifications:

8" Deck Mount Mixing Faucet, Quarter-Turn Cerama Cartridges, Lever Handles, 12" Swing Nozzle & 1/2" NPT Female Inlets

Product Compliance:

ASME A112.18.1 / CSA B125.1
NSF 61 - Section 9
NSF 372 (Low Lead Content)
ANSI A117.1 (ADA)

Drawn: KJG	Checked: DHL	Approved: JHB	Date: 01/15/16	Scale: NTS	Sheet: 2 of 2