T&S BRASS AND BRONZE WORKS, INC.

2 Saddleback Cove / P.O. Box 1088
Travelers Rest, SC 29690

Travelers Rest, SC: 800-476-4103 • Simi Valley, CA: 800-423-0150 • Fax: 864-834-3518 • www.tsbrass.com

Model No.
B-0205-CR-VB-QD

Item No.

ADA Compliant

This Space for Architect/Engineer Approval

Job Name_____Date_____

Model Specified_____ Quantity_____

Customer/Wholesaler_____

Contractor_____

Architect/Engineer_____

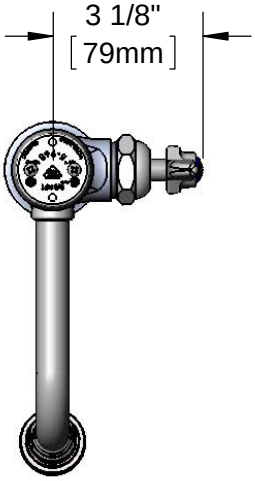

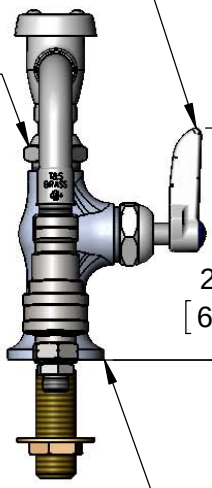

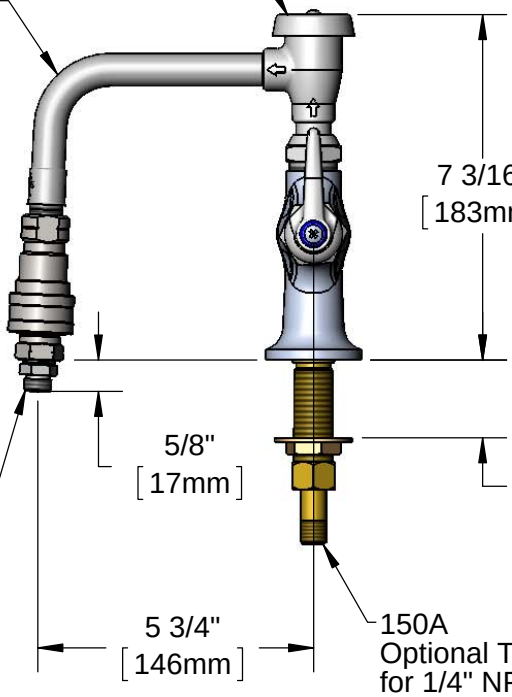

Rough-In Requirement:
∅1" [25mm] Mounting Hole

Product Specifications:
Single Hole Single Temperature Deck Mount Faucet, Quarter-Turn Cerama Cartridge, Lever Handle, Vacuum Breaker, Quick Disconnect & 1/2" NPSM Male Inlet

Product Compliance:
ASME A112.18.1 / CSA B125.1
NSF 61 - Section 9
NSF 372 (Low Lead Content)
ANSI A117.1 (ADA)
ASSE 1001 (VB)

Drawn: JBC	Checked: JRM	Approved: JHB	Date: 05/07/16	Scale: 1:4	Sheet: 1 of 2

T&S BRASS AND BRONZE WORKS, INC.

2 Saddleback Cove / P.O. Box 1088
Travelers Rest, SC 29690

Travelers Rest, SC: 800-476-4103 • Simi Valley, CA: 800-423-0150 • Fax: 864-834-3518 • www.tsbrass.com

Model No.
B-0205-CR-VB-QD

Item No.

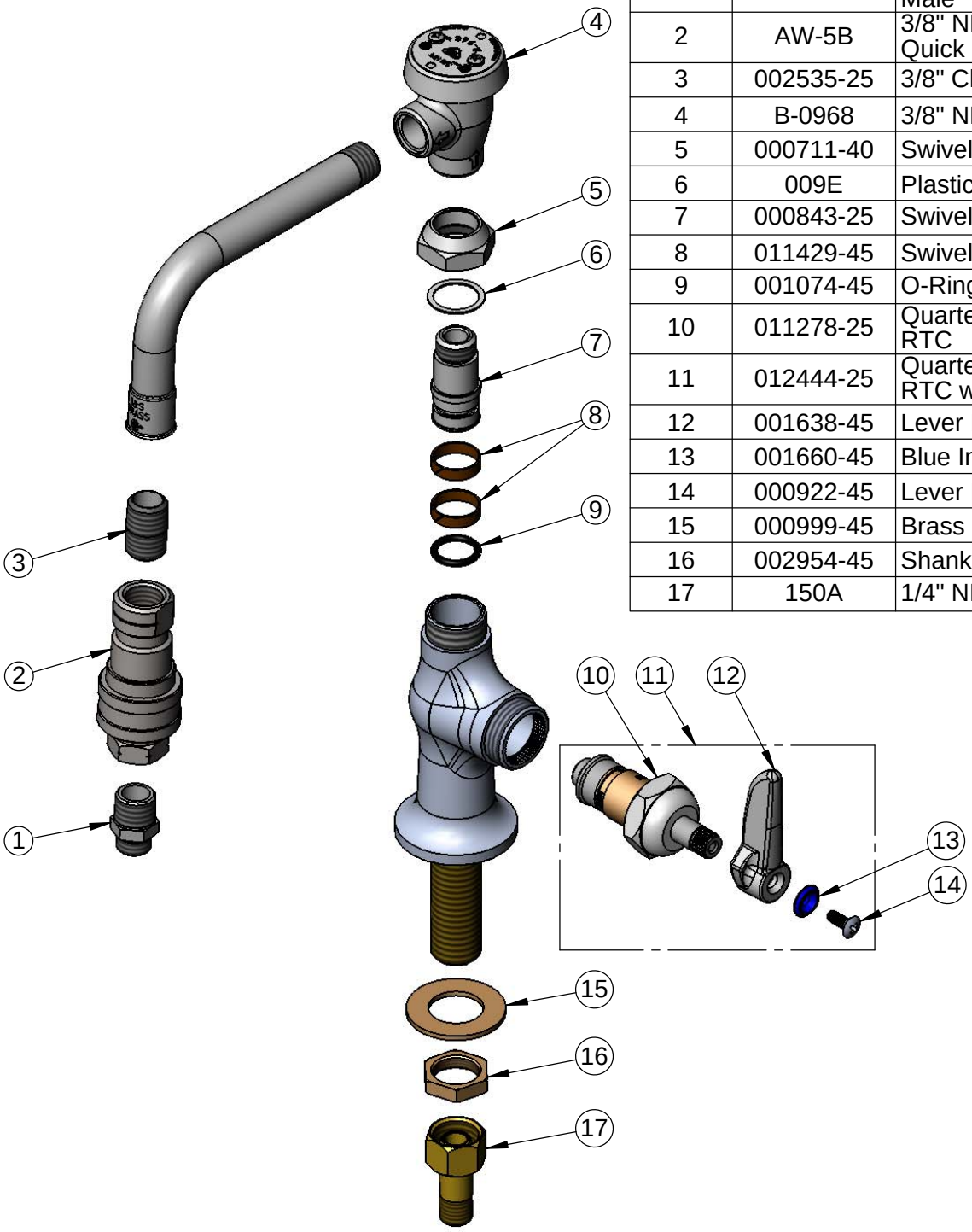

ITEM NO.	SALES NO.	DESCRIPTION
1	006101-45	Adapter, 3/8" NPT x 9/16"-24 UN Male
2	AW-5B	3/8" NPT Socket / Plug Water Quick Disconnect
3	002535-25	3/8" Close Nipple
4	B-0968	3/8" NPT Vacuum Breaker
5	000711-40	Swivel Nut
6	009E	Plastic Washer
7	000843-25	Swivel Body
8	011429-45	Swivel Sleeves (2)
9	001074-45	O-Ring
10	011278-25	Quarter-Turn Cerama Cartridge, RTC
11	012444-25	Quarter-Turn Cerama Cartridge, RTC w/ Handle, Index & Screw
12	001638-45	Lever Handle
13	001660-45	Blue Index-CW
14	000922-45	Lever Handle Screw
15	000999-45	Brass Lock Washer
16	002954-45	Shank Lock Nut
17	150A	1/4" NPT Tailpiece & Nut

Product Specifications:

Single Hole Single Temperature Deck Mount Faucet, Quarter-Turn Cerama Cartridge, Lever Handle, Vacuum Breaker, Quick Disconnect & 1/2" NPSM Male Inlet

Product Compliance:

ASME A112.18.1 / CSA B125.1
NSF 61 - Section 9
NSF 372 (Low Lead Content)
ANSI A117.1 (ADA)
ASSE 1001 (VB)

Drawn: JBC	Checked: JRM	Approved: JHB	Date: 05/07/16	Scale: NTS	Sheet: 2 of 2