T&S BRASS AND BRONZE WORKS, INC.

2 Saddleback Cove / P.O. Box 1088
Travelers Rest, SC 29690

Travelers Rest, SC: 800-476-4103 • Simi Valley, CA: 800-423-0150 • Fax: 864-834-3518 • www.tsbrass.com

Model No.

B-0156-VF22

Item No.

ADA Compliant

This Space for Architect/Engineer Approval

Job Name_____Date_____

Model Specified_____ Quantity_____

Customer/Wholesaler_____

Contractor_____

Architect/Engineer_____

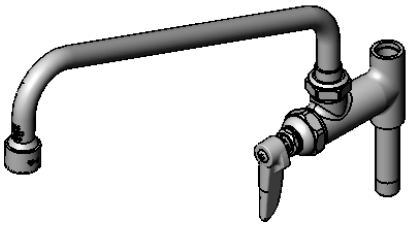

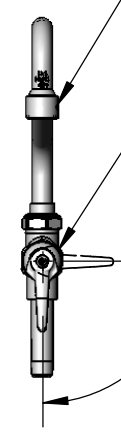

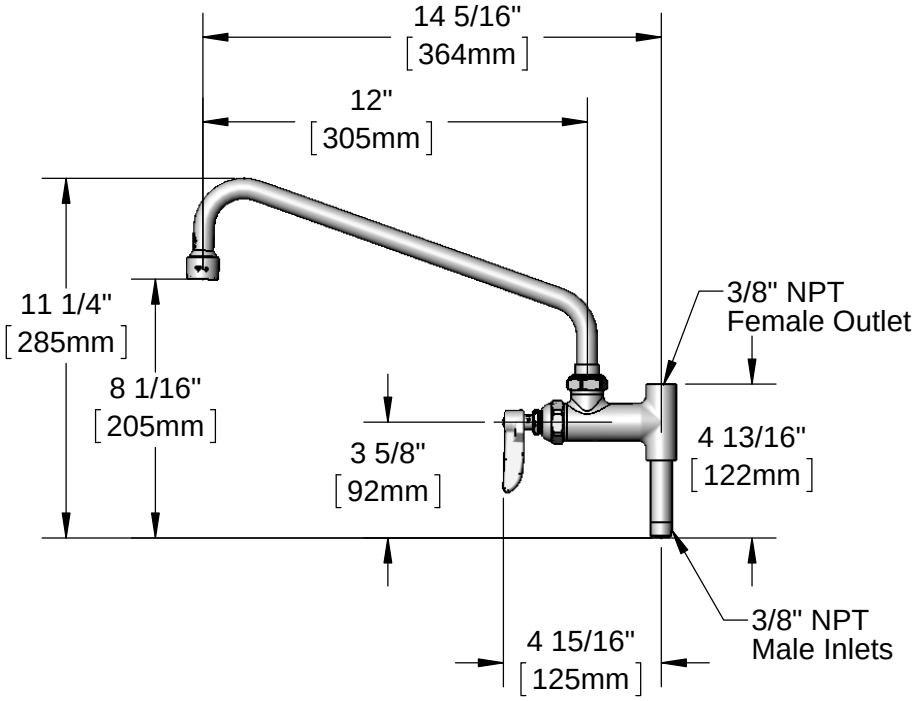

Notes:

1. The Add-On Faucet is an Addition to Pre-Rinse Units and is Installed in Outlets of Base Mixing Faucets of Units Before Fitting Riser Pipes

2. Lever Handle Controls Water On-Off Thru Nozzle Only. Pressure is Always "On" in the Riser Pipe (Controlled by Base Mixing Faucet)

Product Specifications:

Add-On Faucet w/ Quarter-Turn Eterna Cartridge, Lever Handle & 12" Swing Nozzle w/ 2.2 GPM Vandal Resistant Aerator

Product Compliance:

ASME A112.18.1 / CSA B125.1
NSF 61 Exempt (Non-Potable)
NSF 372 (Low Lead Content)
ANSI A117.1 (ADA)

Drawn: JBC	Checked: JRM	Approved: JHB	Date: 08/24/16	Scale: 1:8	Sheet: 1 of 2

T&S BRASS AND BRONZE WORKS, INC.

2 Saddleback Cove / P.O. Box 1088
Travelers Rest, SC 29690

Travelers Rest, SC: 800-476-4103 • Simi Valley, CA: 800-423-0150 • Fax: 864-834-3518 • www.tsbrass.com

Model No.

B-0156-VF22

Item No.

ITEM NO.	SALES NO.	DESCRIPTION
1	B-0199-06	VR 2.2 GPM Aerator w/ Key
2	009538-45	Swivel Washer
3	011429-45	Swivel Sleeves (2)
4	001074-45	O-Ring
5	000358-40	Nipple, 3/8" NPT x 3"
6	005960-40QT	Quarter-Turn Eterna Cartridge, RTC
7	001638-45	Lever Handle
8	000922-45	Lever Handle Screw

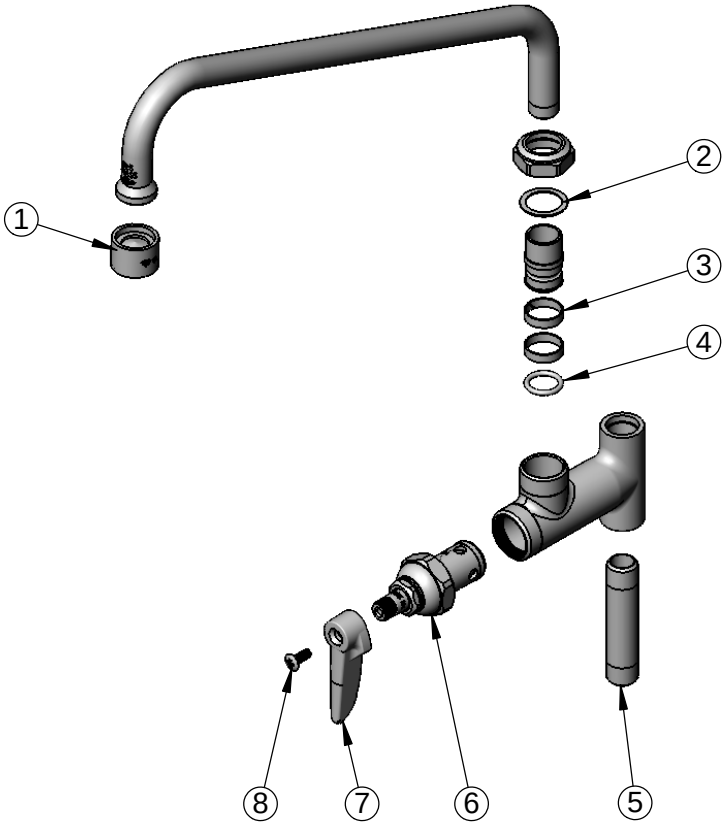

015425-45
Vandal Resistant Key

Product Specifications:

Add-On Faucet w/ Quarter-Turn Eterna Cartridge, Lever Handle & 12" Swing Nozzle w/ 2.2 GPM Vandal Resistant Aerator

Product Compliance:

ASME A112.18.1 / CSA B125.1
NSF 61 Exempt (Non-Potable)
NSF 372 (Low Lead Content)
ANSI A117.1 (ADA)

Drawn: JBC	Checked: JRM	Approved: JHB	Date: 08/24/16	Scale: NTS	Sheet: 2 of 2