T&S BRASS AND BRONZE WORKS, INC.

2 Saddleback Cove / P.O. Box 1088
Travelers Rest, SC 29690

Travelers Rest, SC: 800-476-4103 • Simi Valley, CA: 800-423-0150 • Fax: 864-834-3518 • www.tsbrass.com

Model No.

B-0155-05

Item No.

ADA Compliant

This Space for Architect/Engineer Approval

Job Name_____Date_____

Model Specified_____ Quantity_____

Customer/Wholesaler_____

Contractor_____

Architect/Engineer_____

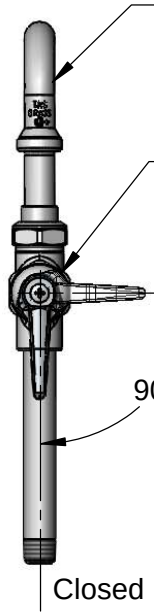

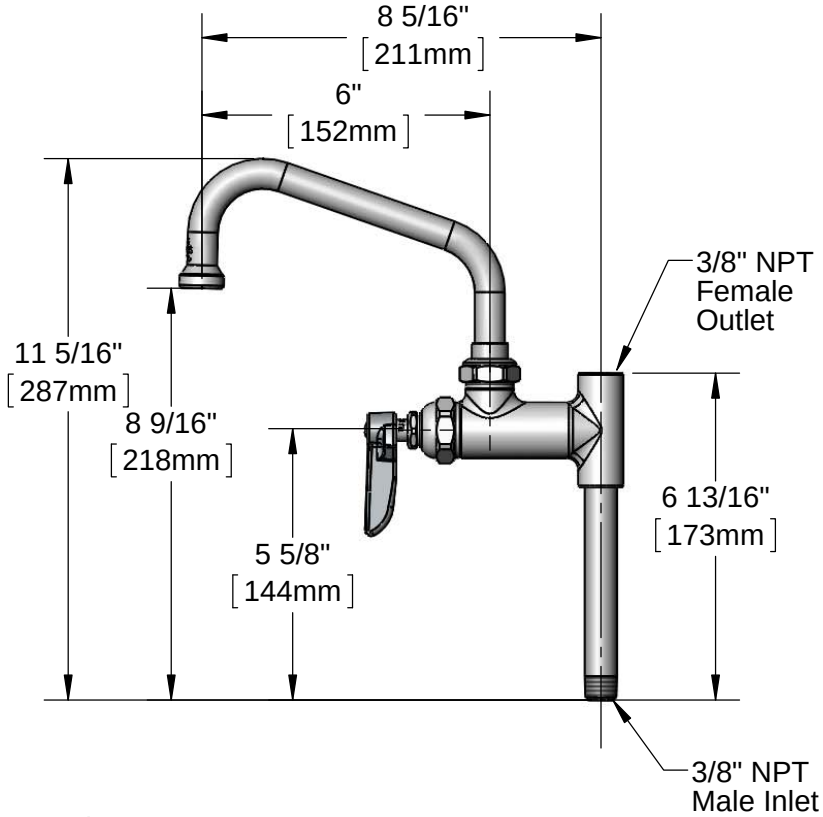

Notes:

1. The Add-On Faucet is an Addition to Pre-Rinse Units and is Installed in Outlets of Base Mixing Faucets of Units Before Fitting Riser Pipes

2. Lever Handle Controls Water On-Off Thru Nozzle Only. Pressure is Always "On" in the Riser Pipe (Controlled by Base Mixing Faucet)

Product Specifications:

Add-On Faucet w/ Quarter-Turn Eterna Cartridge, Lever Handle & 6" Swing Nozzle w/ Stream Regulator Outlet

Product Compliance:

ASME A112.18.1 / CSA B125.1
NSF 61 - Section 9
NSF 372 (Low Lead Content)
ANSI A117.1 (ADA)

Drawn: JBC	Checked: JRM	Approved: JHB	Date: 08/24/16	Scale: 1:4	Sheet: 1 of 2

T&S BRASS AND BRONZE WORKS, INC.

2 Saddleback Cove / P.O. Box 1088
Travelers Rest, SC 29690

Travelers Rest, SC: 800-476-4103 • Simi Valley, CA: 800-423-0150 • Fax: 864-834-3518 • www.tsbrass.com

Model No.

B-0155-05

Item No.

ITEM NO.	SALES NO.	DESCRIPTION
1	059X	6" Swivel Nozzle
2	B-PT	Stream Regulator Outlet
3	001048-45	Nozzle Tip Washer
4	009538-45	Swivel Washer
5	011429-45	Swivel Sleeves (2)
6	001074-45	O-Ring
7	000361-40	Nipple, 3/8" NPT x 5"
8	005960-40QT	Quarter-Turn Eterna Cartridge, RTC
9	001638-45	Lever Handle
10	000922-45	Lever Handle Screw

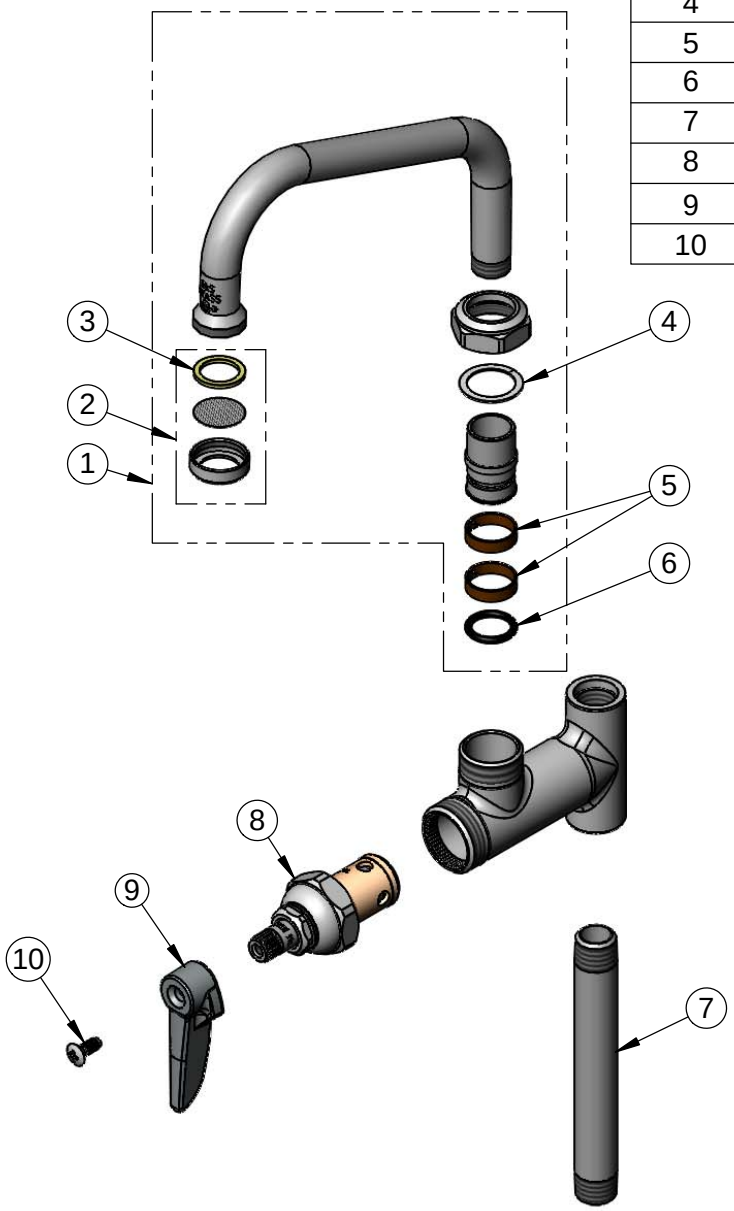

Product Specifications:

Add-On Faucet w/ Quarter-Turn Eterna Cartridge, Lever Handle & 6" Swing Nozzle w/ Stream Regulator Outlet

Product Compliance:

ASME A112.18.1 / CSA B125.1
NSF 61 - Section 9
NSF 372 (Low Lead Content)
ANSI A117.1 (ADA)

Drawn: JBC	Checked: JRM	Approved: JHB	Date: 08/24/16	Scale: NTS	Sheet: 2 of 2