T&S BRASS AND BRONZE WORKS, INC.

2 Saddleback Cove / P.O. Box 1088
Travelers Rest, SC 29690

Travelers Rest, SC: 800-476-4103 • Simi Valley, CA: 800-423-0150 • Fax: 864-834-3518 • www.tsbrass.com

Model No.

B-0133-ADF12-B

Item No.

This Space for Architect/Engineer Approval

Job Name_____Date_____

Model Specified_____ Quantity_____

Customer/Wholesaler_____

Contractor_____

Architect/Engineer_____

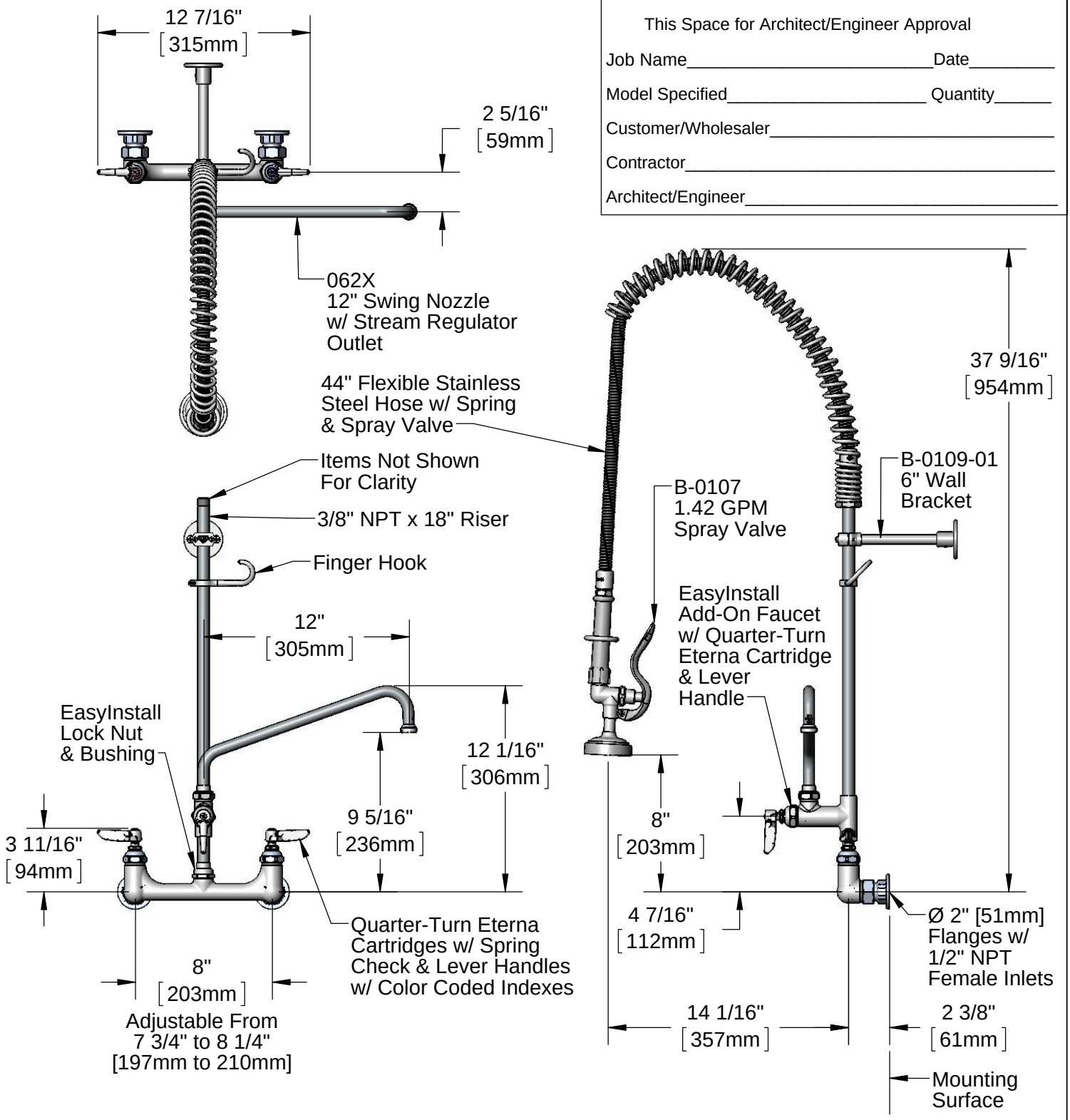

Product Specifications:

Pre-Rinse Unit: EasyInstall 8" Wall Mount Mixing Faucet, Quarter-Turn Eterna Cartridges w/ Spring Checks, Lever Handles, Add-On Faucet, 12" Swing Nozzle, 44" Flexible Stainless Steel Hose, 1.42 GPM Spray Valve, 6" Wall Bracket & 1/2" NPT Female Inlets

Product Compliance:

ASME A112.18.1 / CSA B125.1
NSF 61 - Section 9
NSF 372 (Low Lead Content)
EPAct 2005 (PRSV)

Drawn: KJG	Checked: DMH	Approved: JHB	Date: 08/26/15	Scale: 1:8	Sheet: 1 of 2

T&S BRASS AND BRONZE WORKS, INC.

2 Saddleback Cove / P.O. Box 1088
Travelers Rest, SC 29690

Travelers Rest, SC: 800-476-4103 • Simi Valley, CA: 800-423-0150 • Fax: 864-834-3518 • www.tsbrass.com

Model No.

B-0133-ADF12-B

Item No.

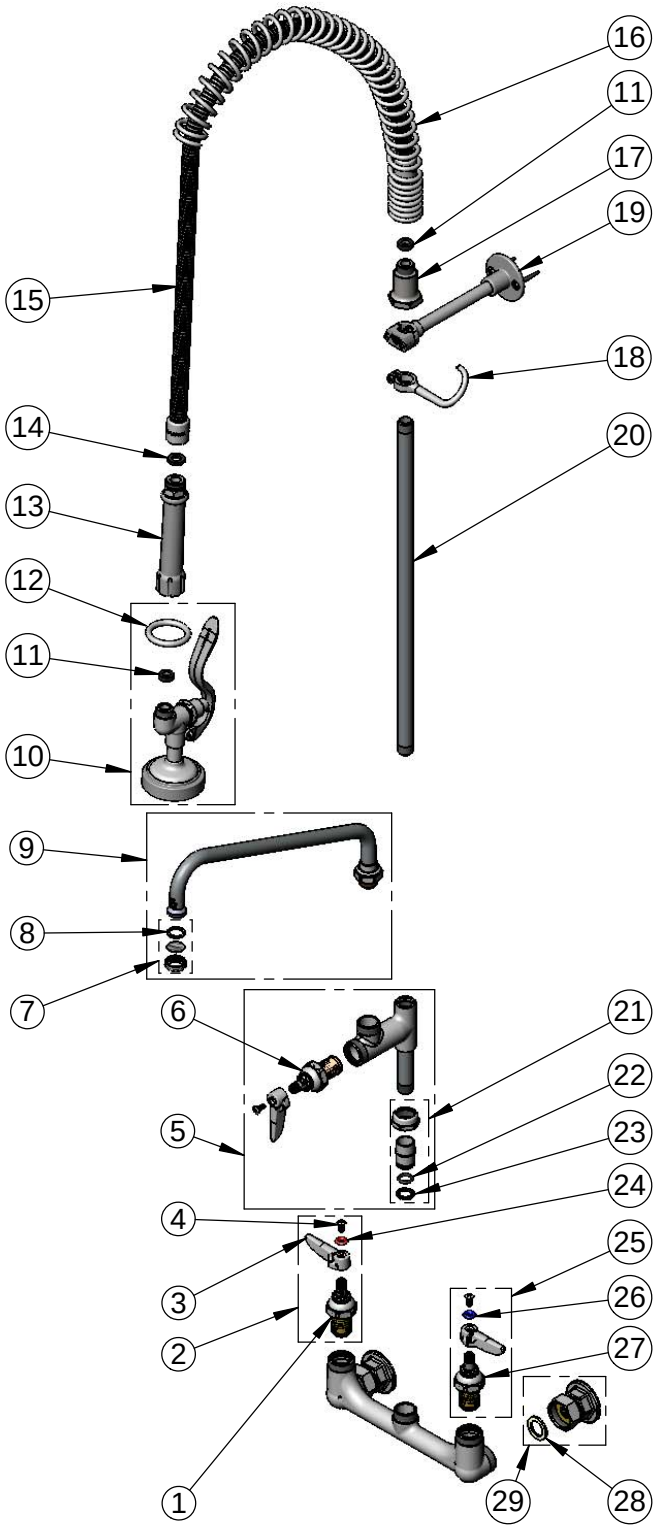

ITEM NO.	SALES NO.	DESCRIPTION
1	012443-40	Quarter-Turn Eterna Cartridge, RTC w/ Spring Check
2	002712-40	Quarter-Turn Eterna Cartridge, RTC w/ Spring Check, Handle, Index & Screw
3	001638-45	Lever Handle
4	000922-45	Lever Handle Screw
5	B-0155-LNEZ	Add-On Faucet w/ Quarter-Turn Eterna Cartridge, RTC & Lever Handle (Less Nozzle)
6	005960-40QT	Quarter-Turn Eterna Cartridge, RTC
7	B-PT	Stream Regulator Outlet
8	001048-45	Nozzle Tip Washer
9	062X	12" Swing Nozzle
10	B-0107	1.42 GPM Spray Valve
11	010476-45	#27 Washer
12	000907-45	Spray Valve Hold Down Ring
13	002987-40	Grip Handle
14	001014-45	Washer, B-0100 Hose Barrel
15	B-0044-H2A	44" Flexible Stainless Steel Hose, Less Handle
16	000888-45	EasyInstall Overhead Spring
17	000821-40	Spring Body
18	004R	Finger Hook
19	B-0109-01	6" Wall Bracket
20	000369-40	3/8" NPT x 18" Riser
21	EZ-K	EasyInstall Kit: Nut, Bushing, O-ring & Lock Washer
22	001065-45	O-Ring
23	014200-45	Star Washer, Anti-Rotation
24	001661-45	Red Index-HW
25	002711-40	Quarter-Turn Eterna Cartridge, LTC w/ Spring Check, Handle, Index & Screw
26	001660-45	Blue Index-CW
27	012442-40	Quarter-Turn Eterna Cartridge, LTC w/ Spring Check
28	001019-45	Coupling Nut Washer
29	00AA	1/2" NPT Female Eccentric Flange

Product Specifications:

Pre-Rinse Unit: EasyInstall 8" Wall Mount Mixing Faucet, Quarter-Turn Eterna Cartridges w/ Spring Checks, Lever Handles, Add-On Faucet, 12" Swing Nozzle, 44" Flexible Stainless Steel Hose, 1.42 GPM Spray Valve, 6" Wall Bracket & 1/2" NPT Female Inlets

Product Compliance:

ASME A112.18.1 / CSA B125.1
NSF 61 - Section 9
NSF 372 (Low Lead Content)
EPAct 2005 (PRSV)

Drawn: KJG	Checked: DMH	Approved: JHB	Date: 08/26/15	Scale: NTS	Sheet: 2 of 2