T&S BRASS AND BRONZE WORKS, INC.

2 Saddleback Cove / P.O. Box 1088
Travelers Rest, SC 29690

Travelers Rest, SC: 800-476-4103 • Simi Valley, CA: 800-423-0150 • Fax: 864-834-3518 • www.tsbrass.com

Model No.

B-0133-ADF06

Item No.

This Space for Architect/Engineer Approval

Job Name_____Date_____

Model Specified_____ Quantity_____

Customer/Wholesaler_____

Contractor_____

Architect/Engineer_____

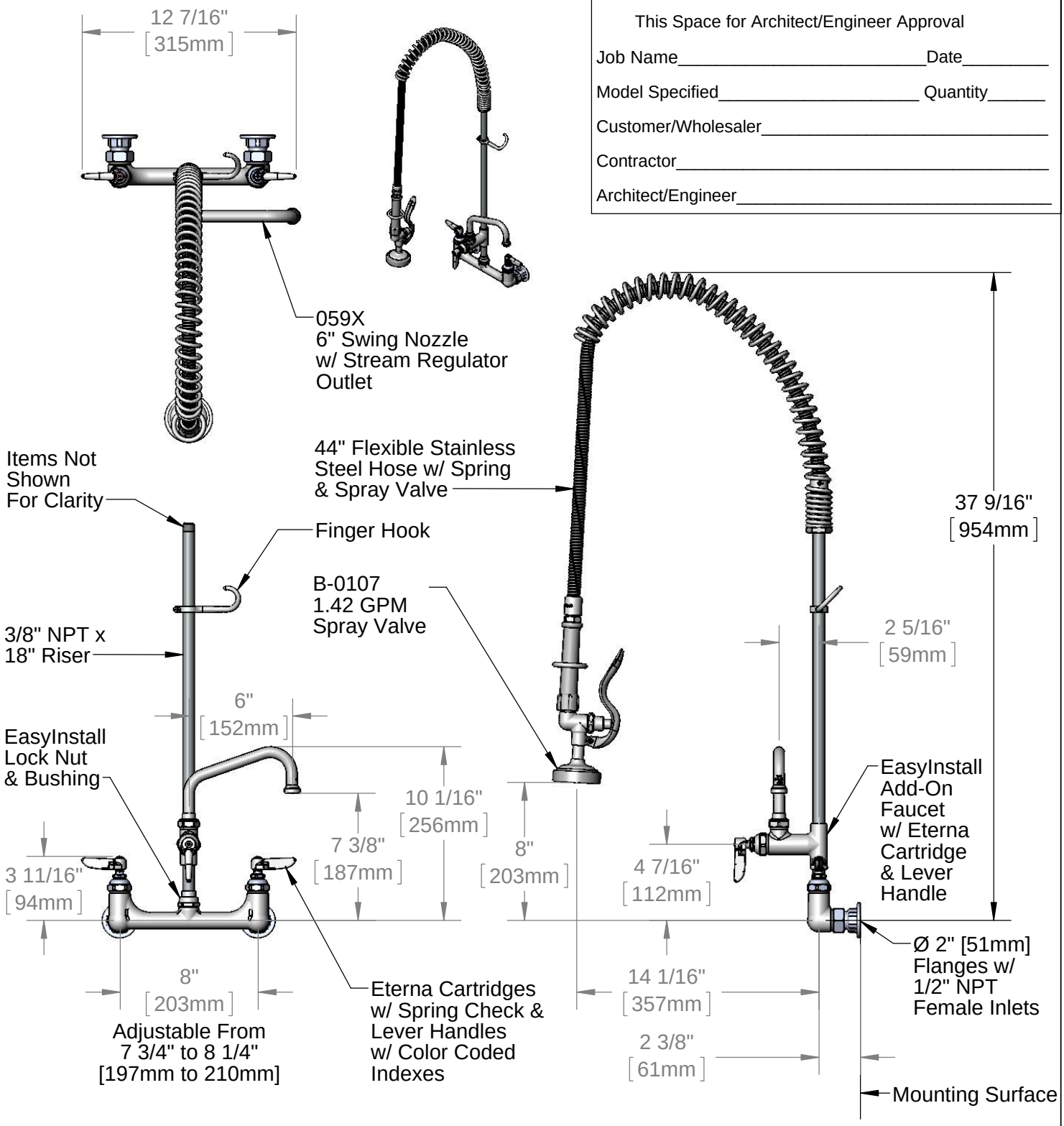

Product Specifications:

Pre-Rinse Unit: EasyInstall 8" Wall Mount Mixing Faucet, Eterna Cartridges w/ Spring Checks, Lever Handles, Add-On Faucet, 6" Swing Nozzle, 44" Flexible Stainless Steel Hose, 1.42 GPM Spray Valve & 1/2" NPT Female Inlets

Product Compliance:

ASME A112.18.1 / CSA B125.1
NSF 61 - Section 9
NSF 372 (Low Lead Content)
EPAct 2005 (PRSV)

Drawn: DHL	Checked: JRM	Approved: JHB	Date: 08/18/15	Scale: 1:8	Sheet: 1 of 2

T&S BRASS AND BRONZE WORKS, INC.

2 Saddleback Cove / P.O. Box 1088
Travelers Rest, SC 29690

Travelers Rest, SC: 800-476-4103 • Simi Valley, CA: 800-423-0150 • Fax: 864-834-3518 • www.tsbrass.com

Model No.

B-0133-ADF06

Item No.

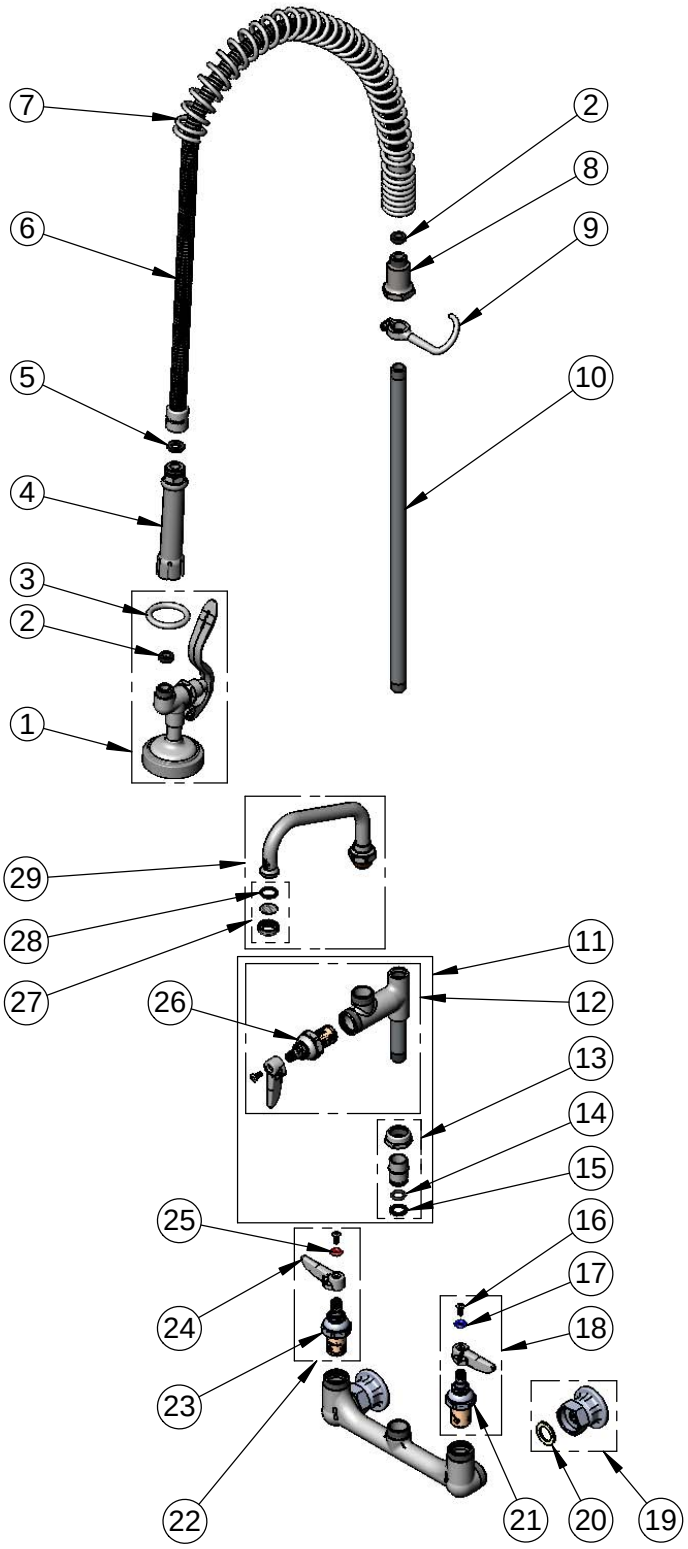

ff	SALES NO.	DESCRIPTION
1	B-0107	1.42 GPM Spray Valve
2	010476-45	#27 Washer
3	000907-45	Spray Valve Hold Down Ring
4	002987-40	Grip Handle
5	001014-45	Washer, B-0100 Hose Barrel
6	B-0044-H2A	44" Flexible Stainless Steel Hose, Less Handle
7	000888-45	EasyInstall Overhead Spring
8	000821-40	Spring Body
9	004R	Finger Hook
10	000369-40	3/8" NPT x 18" Riser
11	B-0155-LNEZ	EasyInstall Add-On Faucet w/ Quarter-Turn Eterna Cartridge, RTC & Lever Handle, Less Nozzle
12	B-0155-LN	Add-On Faucet w/ Quarter-Turn Eterna Cartridge, RTC & Lever Handle, Less Nozzle
13	EZ-K	EasyInstall Kit: Nut, Bushing, O-ring & Lock Washer
14	001065-45	O-Ring
15	014200-45	Star Washer, Anti-Rotation
16	000922-45	Lever Handle Screw
17	001660-45	Blue Index-CW
18	002711-40	Eterna Cartridge, LTC w/ Spring Check, Handle, Index & Screw
19	00AA	1/2" NPT Female Eccentric Flange
20	001019-45	Coupling Nut Washer
21	012442-40	Eterna Cartridge, LTC w/ Spring Check
22	002712-40	Eterna Cartridge, RTC w/ Spring Check, Handle, Index & Screw
23	012443-40	Eterna Cartridge, RTC w/ Spring Check
24	001638-45	Lever Handle
25	001661-45	Red Index-HW
26	005960-40QT	1/4 Turn Eterna Cartridge, RTC
27	B-PT	Stream Regulator Outlet
28	001048-45	Nozzle Tip Washer
29	059X	6" Swing Nozzle

Product Specifications:

Pre-Rinse Unit: EasyInstall 8" Wall Mount Mixing Faucet, Eterna Cartridges w/ Spring Checks, Lever Handles, Add-On Faucet, 6" Swing Nozzle, 44" Flexible Stainless Steel Hose, 1.42 GPM Spray Valve & 1/2" NPT Female Inlets

Product Compliance:

ASME A112.18.1 / CSA B125.1
NSF 61 - Section 9
NSF 372 (Low Lead Content)
EPAct 2005 (PRSV)

Drawn: DHL	Checked: JRM	Approved: JHB	Date: 08/18/15	Scale: NTS	Sheet: 2 of 2