T&S BRASS AND BRONZE WORKS, INC.

2 Saddleback Cove / P.O. Box 1088
Travelers Rest, SC 29690

Travelers Rest, SC: 800-476-4103 • Simi Valley, CA: 800-423-0150 • Fax: 864-834-3518 • www.tsbrass.com

Model No.

B-0131-B

Item No.

This Space for Architect/Engineer Approval

Job Name_____Date_____

Model Specified_____ Quantity_____

Customer/Wholesaler_____

Contractor_____

Architect/Engineer_____

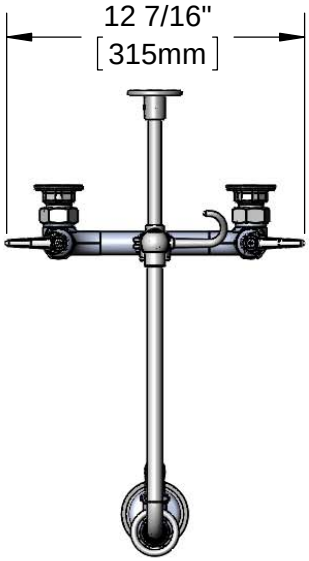

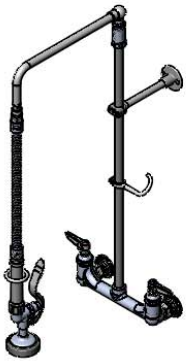

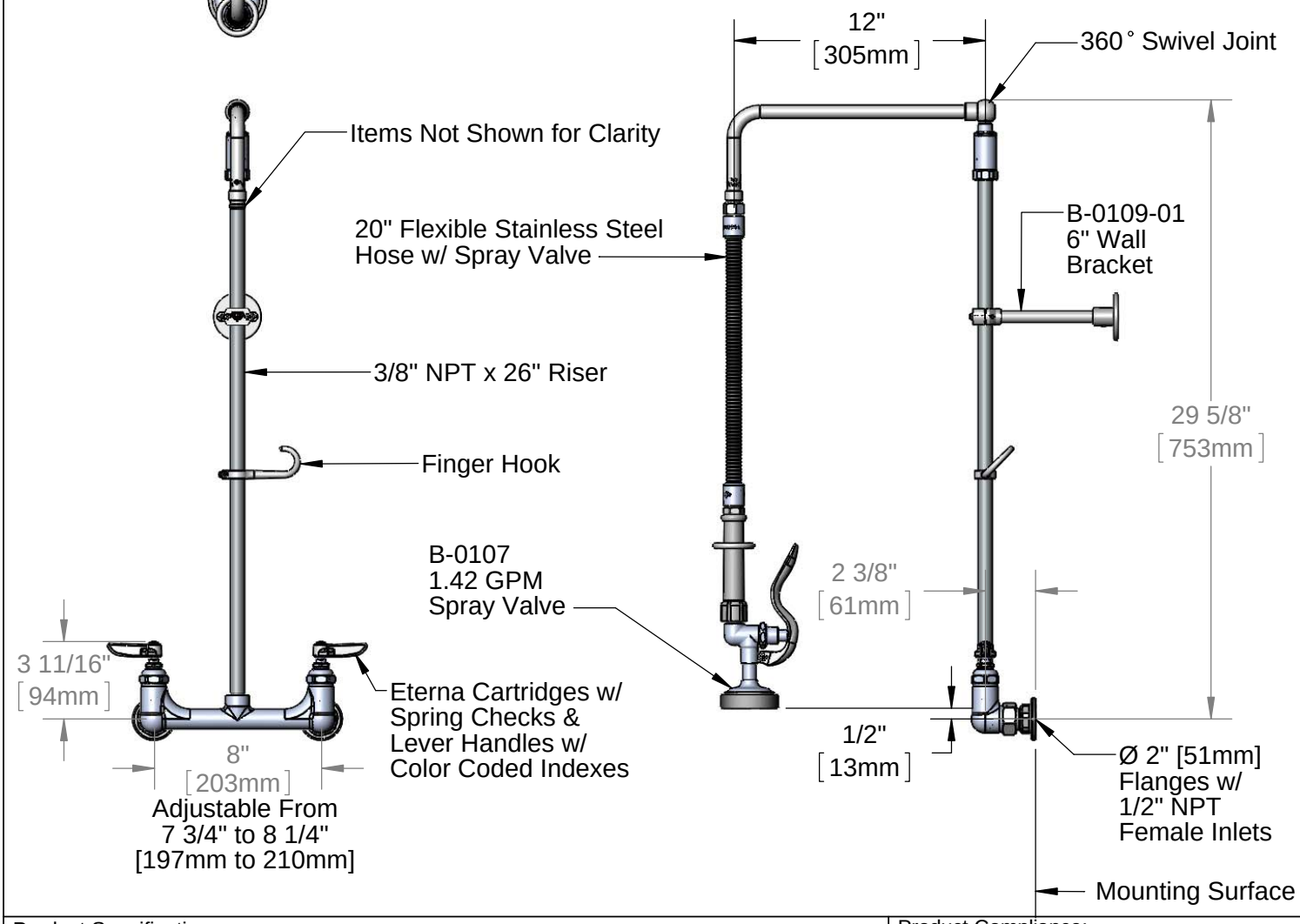

Product Specifications:

Pre-Rinse Unit: 8" Wall Mount Mixing Faucet, Eterna Cartridges w/ Spring Checks, Lever Handles, Overhead Swivel Arm, 20" Flexible Stainless Steel Hose w/ 1.42 GPM Spray Valve, 6" Wall Bracket & 1/2" NPT Female Inlets

Product Compliance:

ASME A112.18.1 / CSA B125.1
NSF 61 - Section 9
NSF 372 (Low Lead Content)
EPAct 2005 (PRSV)

Drawn: KJG	Checked: JRM	Approved: JHB	Date: 03/14/14	Scale: 1:8	Sheet: 1 of 2

T&S BRASS AND BRONZE WORKS, INC.

2 Saddleback Cove / P.O. Box 1088
Travelers Rest, SC 29690

Travelers Rest, SC: 800-476-4103 • Simi Valley, CA: 800-423-0150 • Fax: 864-834-3518 • www.tsbrass.com

Model No.

B-0131-B

Item No.

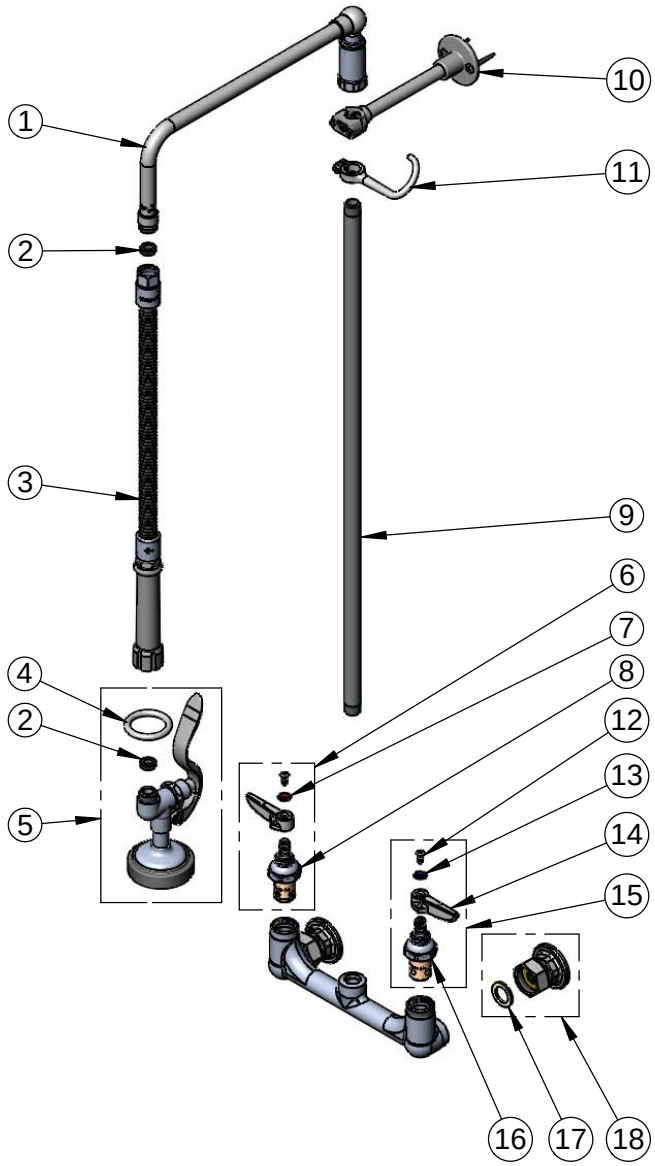

ITEM NO.	SALES NO.	DESCRIPTION
1	002882-40	12" Swivel L-Tube
2	010476-45	#27 Washer
3	B-0020-H	20" Flexible Stainless Steel Hose
4	000907-45	Spray Valve Hold Down Ring
5	B-0107	1.42 GPM Spray Valve
6	002712-40	Eterna Cartridge, RTC w/ Spring Check, Handle, Index & Screw
7	001661-45	Red Index-HW
8	012443-40	Eterna Cartridge, RTC w/ Spring Check
9	000373-40	3/8" NPT x 26" Riser
10	B-0109-01	6" Wall Bracket
11	004R	Finger Hook
12	000922-45	Lever Handle Screw
13	001660-45	Blue Index-CW
14	001638-45	Lever Handle
15	002711-40	Eterna Cartridge, LTC w/ Spring Check, Handle, Index & Screw
16	012442-40	Eterna Cartridge, LTC w/ Spring Check
17	001019-45	Coupling Nut Washer
18	00AA	1/2" NPT Female Eccentric Flange

Product Specifications:

Pre-Rinse Unit: 8" Wall Mount Mixing Faucet, Eterna Cartridges w/ Spring Checks, Lever Handles, Overhead Swivel Arm, 20" Flexible Stainless Steel Hose w/ 1.42 GPM Spray Valve, 6" Wall Bracket & 1/2" NPT Female Inlets

Product Compliance:

ASME A112.18.1 / CSA B125.1
NSF 61 - Section 9
NSF 372 (Low Lead Content)
EPAct 2005 (PRSV)

Drawn: KJG	Checked: JRM	Approved: JHB	Date: 03/14/14	Scale: NTS	Sheet: 2 of 2