T&S BRASS AND BRONZE WORKS, INC.

2 Saddleback Cove / P.O. Box 1088
Travelers Rest, SC 29690

Travelers Rest, SC: 800-476-4103 • Simi Valley, CA: 800-423-0150 • Fax: 864-834-3518 • www.tsbrass.com

Model No.

B-0113-A12B-TEE

Item No.

This Space for Architect/Engineer Approval

Job Name_____Date_____

Model Specified_____ Quantity_____

Customer/Wholesaler_____

Contractor_____

Architect/Engineer_____

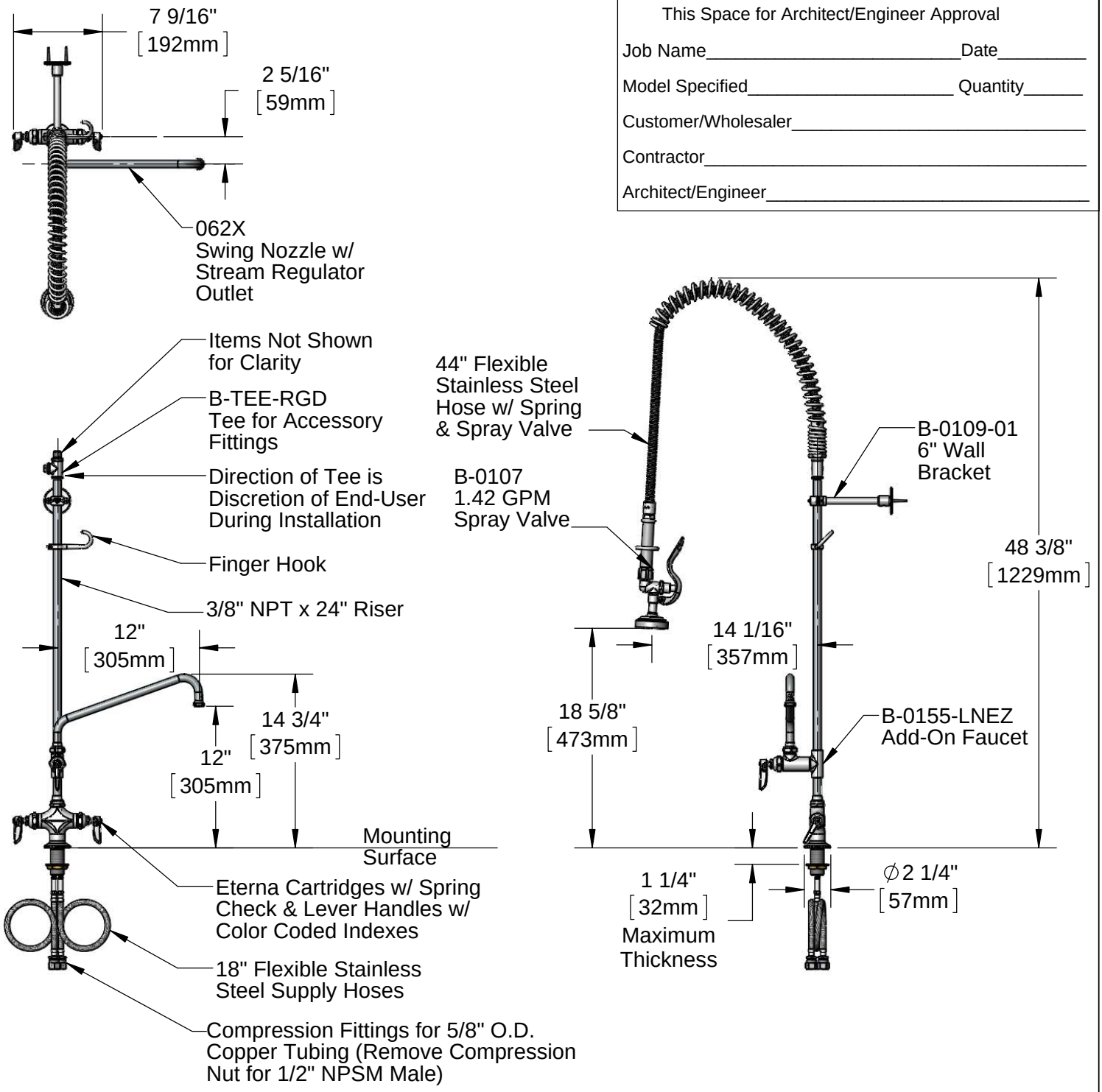

Rough-In Requirement:
∅1 1/2" [∅38mm] Mounting Hole

Product Specifications:

EasyInstall Pre-Rinse Unit: Single Hole Deck Mount Faucet, Eterna Cartridges w/ Spring Checks, Lever Handles, Add-On Faucet w/ 12" Swing Nozzle, 24" Riser, 44" Flexible Stainless Steel Hose, 1.42 GPM Spray Valve, Flexible Stainless Steel Supply Hoses, Accessory Tee and 6" Wall Bracket

Product Compliance:

ASME A112.18.1 / CSA B125.1
NSF 61 - Section 9
NSF 372 (Low Lead Content)
EPAct 2005 (PRSV)

Drawn: JBC	Checked: JRM	Approved: JHB	Date: 08/18/15	Scale: 1:12	Sheet: 1 of 2

T&S BRASS AND BRONZE WORKS, INC.

2 Saddleback Cove / P.O. Box 1088
Travelers Rest, SC 29690

Travelers Rest, SC: 800-476-4103 • Simi Valley, CA: 800-423-0150 • Fax: 864-834-3518 • www.tsbrass.com

Model No.

B-0113-A12B-TEE

Item No.

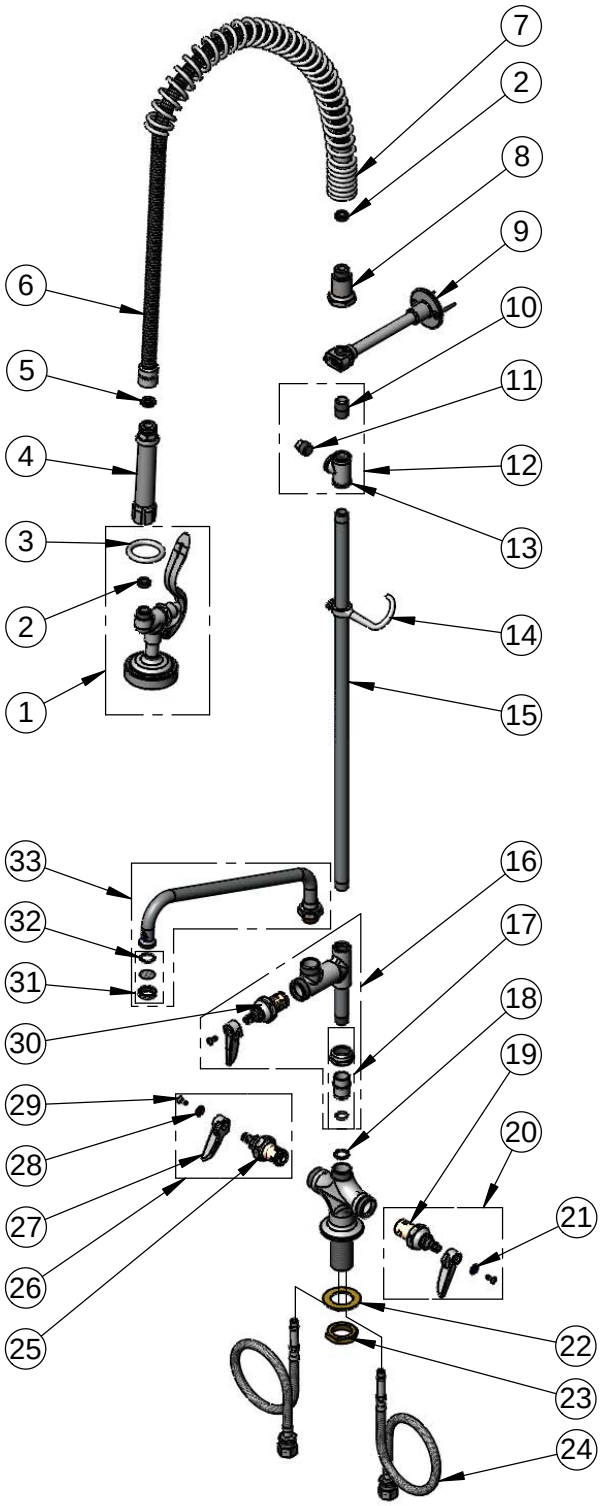

ITEM NO.	SALES NO.	DESCRIPTION
1	B-0107	1.42 Spray Valve
2	010476-45	#27 Washer
3	000907-45	Spray Valve Hold Down Ring
4	002987-40	Grip Handle
5	001014-45	Washer, B-0100 Hose Barrel
6	B-0044-H2A	44" Flexible Stainless Steel Hose, Less Handle
7	000888-45	EasyInstall Overhead Spring
8	000821-40	Spring Body
9	B-0109-01	6" Wall Bracket
10	002535-25	3/8" NPT Close Nipple
11	002369-25	3/8" NPT Plug
12	B-TEE-RGD	Rigid Tee
13	001614-40	3/8" NPT Tee
14	004R	Finger Hook
15	000372-40	3/8" NPT x 24" Riser
16	B-0155-LNEZ	Add-On Faucet w/ 1/4 Turn Eterna Cartridge, RTC & Lever Handle (Less Nozzle)
17	EZ-K	EasyInstall Kit: Bushing, O-Ring, Lock Washer & LocTite 222
18	014200-45	Star Washer, Anti-Rotation
19	012442-40	Eterna Cartridge, LTC w/ Spring Check
20	002711-40	Eterna Cartridge, LTC w/ Spring Check, Handle, Index, & Screw
21	001660-45	Blue Index-CW
22	002290-45	Lock Washer
23	000965-45	Lock Nut
24	012534-45	18" Flexible Supply Hose (2)
25	012443-40	Eterna Cartridge, RTC w/ Spring Check
26	002712-40	Eterna Cartridge, RTC w/ Spring Check, Handle, Index, & Screw
27	001638-45	Lever Handle
28	001661-45	Red Index-HW
29	000922-45	Lever Handle Screw
30	005960-40QT	Nut, Plated Packing
31	B-PT	Stream Regulator Outlet
32	001048-45	Nozzle Tip Washer
33	062X	12" Swing Nozzle

Product Specifications:

EasyInstall Pre-Rinse Unit: Single Hole Deck Mount Faucet, Eterna Cartridges w/ Spring Checks, Lever Handles, Add-On Faucet w/ 12" Swing Nozzle, 24" Riser, 44" Flexible Stainless Steel Hose, 1.42 GPM Spray Valve, Flexible Stainless Steel Supply Hoses, Accessory Tee and 6" Wall Bracket

Product Compliance:

ASME A112.18.1 / CSA B125.1
NSF 61 - Section 9
NSF 372 (Low Lead Content)
EPAct 2005 (PRSV)

Drawn: JBC	Checked: JRM	Approved: JHB	Date: 08/18/15	Scale: NTS	Sheet: 2 of 2