T&S BRASS AND BRONZE WORKS, INC.

2 Saddleback Cove / P.O. Box 1088
Travelers Rest, SC 29690

Travelers Rest, SC: 800-476-4103 • Simi Valley, CA: 800-423-0150 • Fax: 864-834-3518 • www.tsbrass.com

Model No.

B-0107-QD

Item No.

This Space for Architect/Engineer Approval

Job Name_____Date_____

Model Specified_____ Quantity_____

Customer/Wholesaler_____

Contractor_____

Architect/Engineer_____

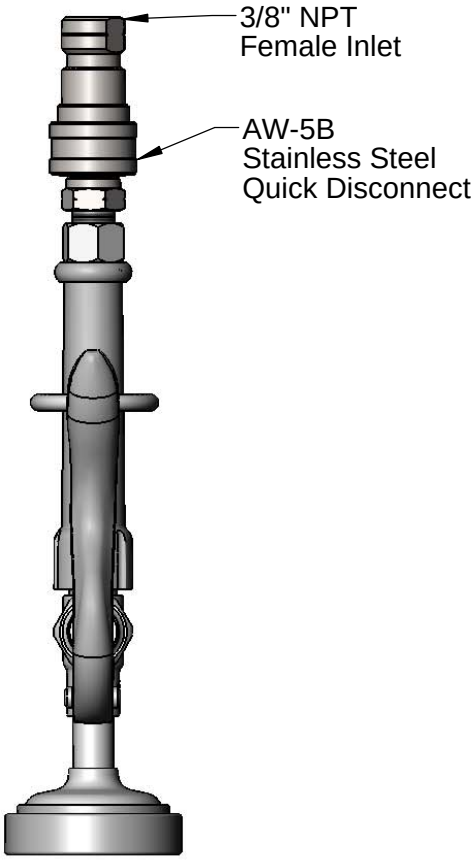

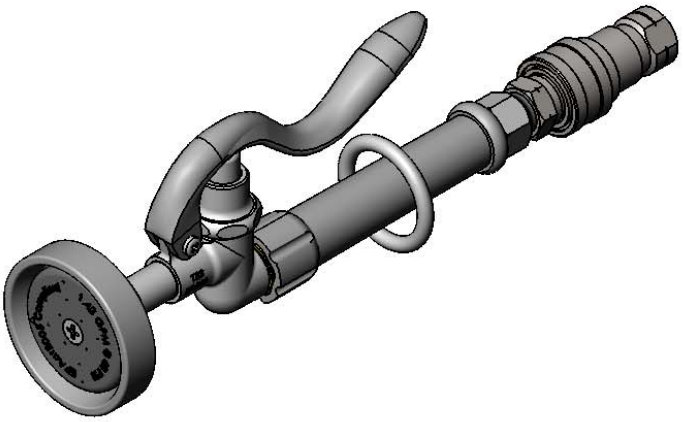

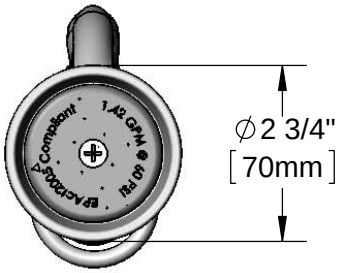

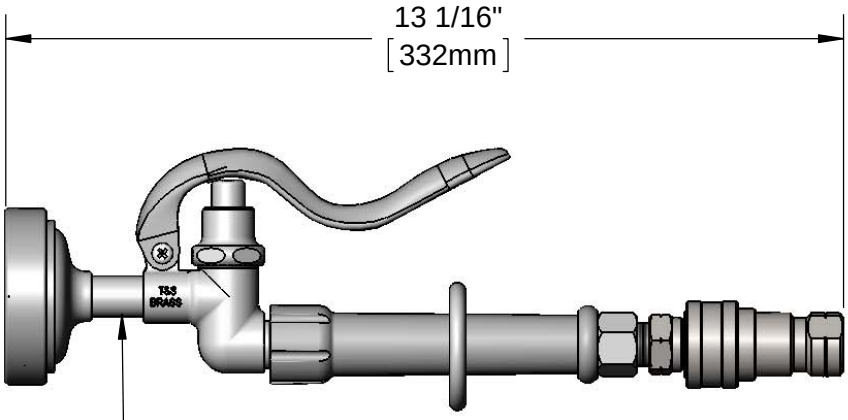

Product Specifications:

1.42 GPM Grey Spray Valve w/ Handle, Hold Down Ring & Stainless Steel Quick Disconnect

Product Compliance:

ASME A112.18.1 / CSA B125.1
NSF 61 - Section 9
NSF 372 (Low Lead Content)
EPAct 2005 (PRSV)

Drawn: JRM	Checked: JBC	Approved: JHB	Date: 09/30/16	Scale: 1:3	Sheet: 1 of 2

T&S BRASS AND BRONZE WORKS, INC.

2 Saddleback Cove / P.O. Box 1088
Travelers Rest, SC 29690

Travelers Rest, SC: 800-476-4103 • Simi Valley, CA: 800-423-0150 • Fax: 864-834-3518 • www.tsbrass.com

Model No.

B-0107-QD

Item No.

ITEM NO.	SALES NO.	DESCRIPTION
1	B-0107	1.42 GPM Gray Spray Valve
2	010476-45	#27 Washer
3	000907-45	Spray Valve Hold Down Ring
4	002881-40	3/8" NPT Handle
5	002535-25	3/8" Close Nipple
6	AW-5B	3/8" NPT Stainless Steel Quick Disconnect

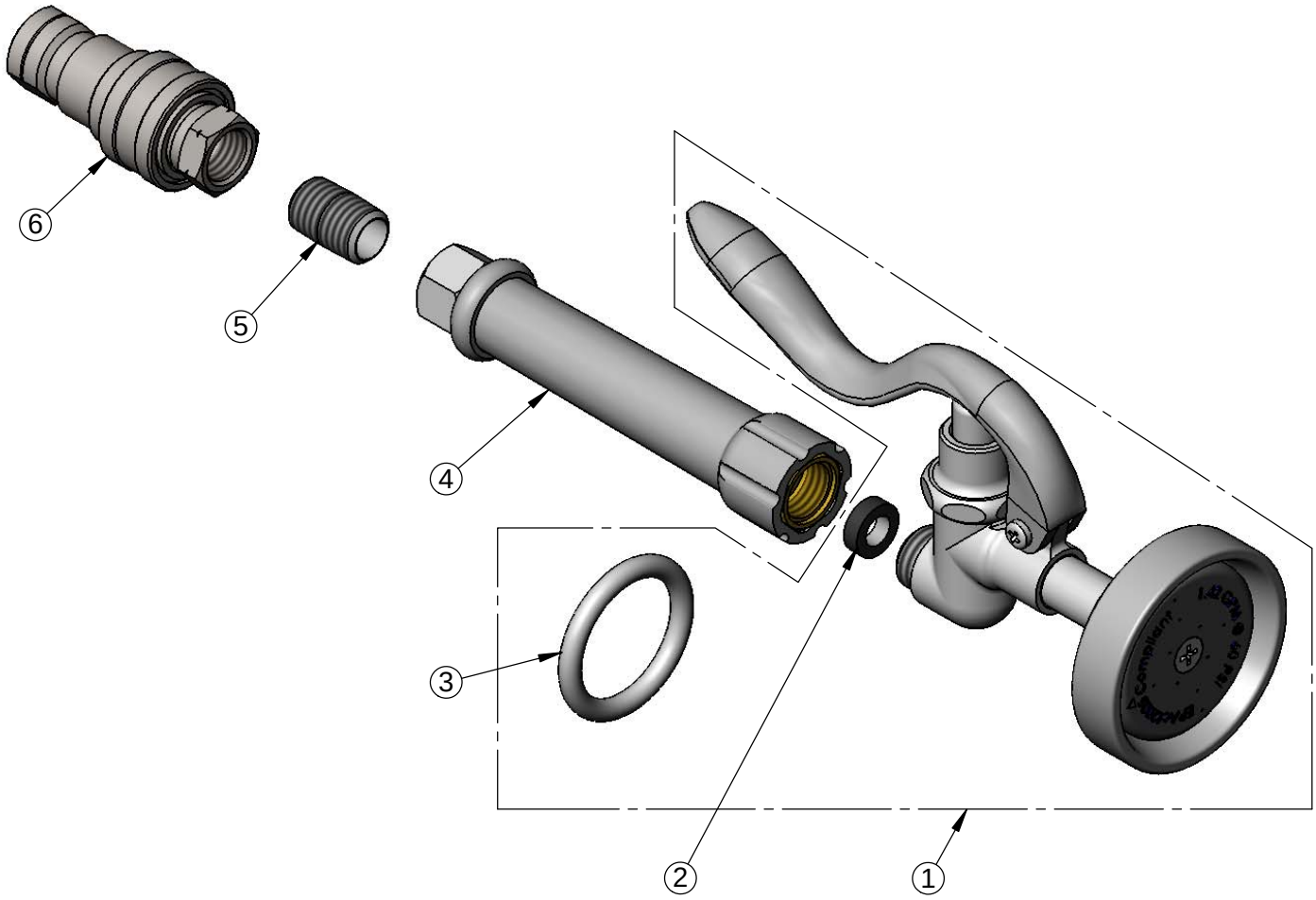

Product Specifications:

1.42 GPM Grey Spray Valve w/ Handle, Hold Down Ring & Stainless Steel Quick Disconnect

Product Compliance:

ASME A112.18.1 / CSA B125.1
NSF 61 - Section 9
NSF 372 (Low Lead Content)
EPAct 2005 (PRSV)

Drawn: JRM	Checked: JBC	Approved: JHB	Date: 09/30/16	Scale: NTS	Sheet: 2 of 2