T&S BRASS AND BRONZE WORKS, INC.

2 Saddleback Cove / P.O. Box 1088
Travelers Rest, SC 29690

Travelers Rest, SC: 800-476-4103 • Simi Valley, CA: 800-423-0150 • Fax: 864-834-3518 • www.tsbrass.com

Model No.

EB-0107-J-HF12

Item No.

This Space for Architect/Engineer Approval

Job Name_____Date_____

Model Specified_____ Quantity_____

Customer/Wholesaler_____

Contractor_____

Architect/Engineer_____

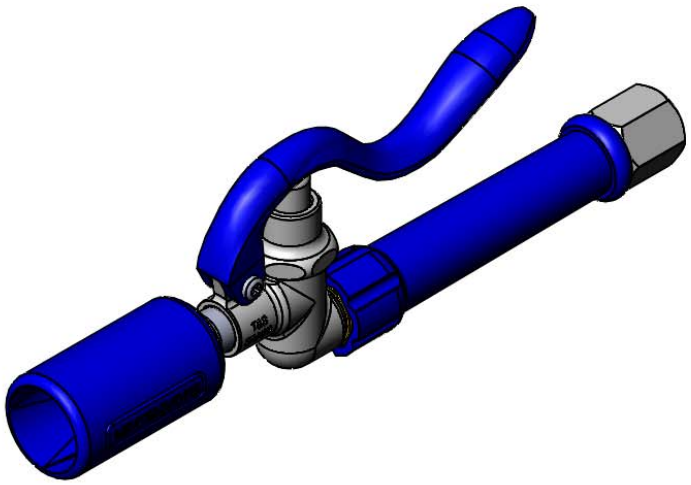

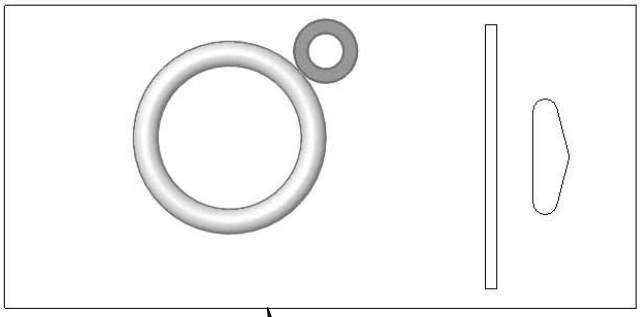

Hose Washer &
Hold Down Ring
(Included)

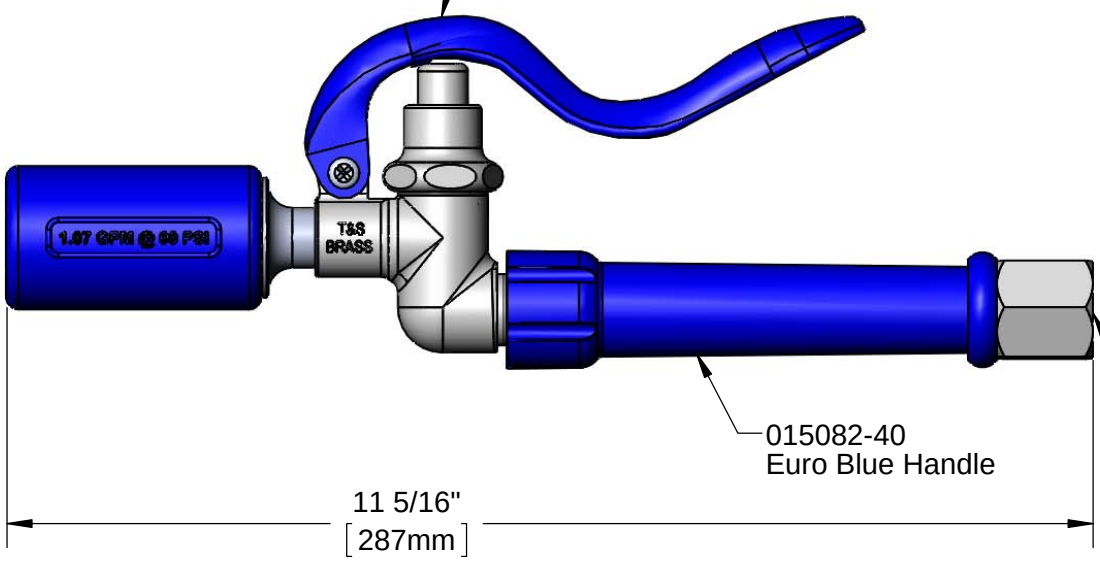

Product Specifications:

Pre-Rinse Unit Accessory:
Blue 1.07 GPM Low Flow Spray Valve & Euro Blue Handle w/ 1/2" NPSM Female Inlet

Product Compliance:

ASME A112.18.1 / CSA B125.1
NSF 61 - Section 9
NSF 372 (Low Lead Content)
EPAct 2005 (PRSV)
EPA WaterSense (PRSV)

Drawn: KJG	Checked: JRM	Approved: JHB	Date: 10/14/15	Scale: 1:2	Sheet: 1 of 2

T&S BRASS AND BRONZE WORKS, INC.

2 Saddleback Cove / P.O. Box 1088
Travelers Rest, SC 29690

Travelers Rest, SC: 800-476-4103 • Simi Valley, CA: 800-423-0150 • Fax: 864-834-3518 • www.tsbrass.com

Model No.

EB-0107-J-HF12

Item No.

ITEM NO.	SALES NO.	DESCRIPTION
1	EB-0107-J	1.07 GPM Spray Valve (Blue)
2	010476-45	#27 Washer
3	015082-40	Euro Grip Handle (Blue)
4	000907-45	Spray Valve Hold Down Ring

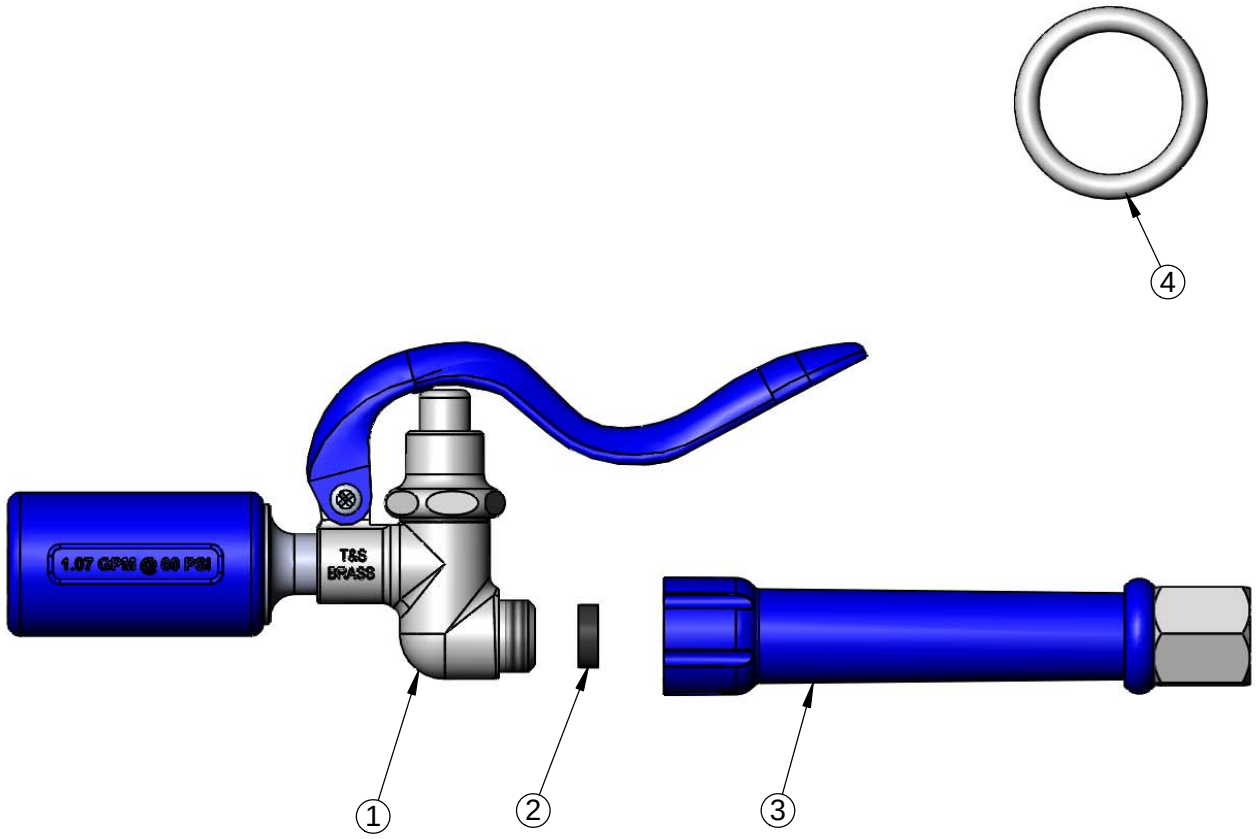

Product Specifications:

Pre-Rinse Unit Accessory:
Blue 1.07 GPM Low Flow Spray Valve & Euro Blue Handle w/ 1/2" NPSM Female Inlet

Product Compliance:

ASME A112.18.1 / CSA B125.1
NSF 61 - Section 9
NSF 372 (Low Lead Content)
EPAct 2005 (PRSV)
EPA WaterSense (PRSV)

Drawn: KJG	Checked: JRM	Approved: JHB	Date: 10/14/15	Scale: NTS	Sheet: 2 of 2